General Disclaimer

One or more of the Following Statements may affect this Document

- This document has been reproduced from the best copy furnished by the organizational source. It is being released in the interest of making available as much information as possible.

- This document may contain data, which exceeds the sheet parameters. It was furnished in this condition by the organizational source and is the best copy available.

- This document may contain tone-on-tone or color graphs, charts and/or pictures, which have been reproduced in black and white.

- This document is paginated as submitted by the original source.

- Portions of this document are not fully legible due to the historical nature of some of the material. However, it is the best reproduction available from the original submission.

Produced by the NASA Center for Aerospace Information (CASI)

ADVANCED KINETICS, INC.

INSTRUCTION MANUAL
OPTICAL EFFECTS MODULE
ELECTRONIC CONTROLLER & PROCESSOR
MODEL OEMCP

(NASA-CR-144125) INSTRUCTION MANUAL, OPTICAL EFFECTS MODULE ELECTRONIC CONTROLLER AND PROCESSOR, MODEL OEMCP (Advanced Kinetics, Inc., Costa Mesa, Calif.) 39 p HC $4.00 CSCL 09A G3/33

N76-15377

Unclas 07469

Manufactured for

NATIONAL AERONAUTICS AND SPACE ADMINISTRATION

GEORGE C. MARSHALL SPACE FLIGHT CENTER

HUNTSVILLE, ALABAMA 35812

RECEIVED
NASA STI FACILITY
INPUT BRANCH

Date: November 14, 1975

Reference No.: 1054-303

Customer P.O. No.: NAS8-31334

Checked By:

TABLE OF CONTENTS

PAGE

I) INTRODUCTION 1

II) SPECIFICATIONS 2

III) CIRCUIT DESCRIPTION 4

A) SIGNAL PROCESSING AND CHOPPER 4

B) SEQUENCER AND CONTROLLER 7

C) POWER SUPPLY 10

IV) OPERATING INSTRUCTIONS 11

A) FRONT PANEL 11

B) BACK PANEL 14

V) CALIBRATION PROCEDURE 16

A) SAMPLE TIMER CALIBRATION 16

B) CHOPPER SPEED ADJUSTMENT 16

C) DAC OFFSET AND FULL SCALE ADJUSTMENT 17

VI) TROUBLESHOOTING PROCEDURE 19

TABLE I CP1, OEME to OEMCP Interface
TABLE II CP2, Digital Outputs

DRAWING 1 Optical Effects Module Block Diagram
DRAWING 2 OEM Sequencer Timing Diagram
DRAWING 3 OEM Wiring Diagram
DRAWING 4 OEM Power Supply
DRAWING 5 Analog Divider & Chopper Controller
DRAWING 6 OEM Sequencer & Controller, PCB-078

I) INTRODUCTION

The OEM-1 Electronic Module is comprised of basically four subsystems:

i) The signal processing and display,

ii) The stepper motor controls,

iii) The chopper controls,

iv) The DC-DC invertor.

Each of these subsystems will be discussed in detail within this Instruction Manual.

The OEM-1 module controls the sample wheel so that the relative transmittance of the samples can be compared to the clear aperture position. The 3-1/2 digit DVM displays the clear aperture signal level as well as the ratio of the remaining sample positions relative to the clear aperture position. The sample wheel position is decoded so that the signals and ratios can be correlated to the data. The OEM is automatically reset to the I_o on initial turn-on and can be reset to the "0" position by actuating a front panel switch. The sample wheel can be interrupted to change samples or induce a longer integration time if desired by a front panel command. Integration times from 1 - 50 seconds are provided at the front panel. BCD data for external interfacing is provided.

II) SPECIFICATIONS

OEM Electronics

Analog Divider Accuracy	± 0.25% for I_o > 100 mV
Ratio Accuracy	< 0.4%; (I_o = 10 V)
DVM Accuracy	0.05% Reading ± 0.05% F.S.
DVM Temp. Coefficient	± 0.005% R/°C
DVM F. S. Sensitivity	19.99 V
DVM Resolution	10 mV
DVM Input Impedance	1 Mohm
DVM Digital Outputs	Parallel BCD, TTL Compatible, 1-2-4-8 Code
DVM Reading Rate	Up to 10 / sec
System Sample Time	1, 2, 5, 10, 20 and 50 sec
Maximum Input	+ 10 VDC
Input Polarity	Positive
I_o Analog Output	+ 10 V Max
I_n / I_o Analog Output	+ 10 V Max.
I_n Analog Output	+ 10 V Max
Number of Sample Positions	8
Position Indicators	Front Panel LED Indicators. One for each position.
Position Data	Parallel BCD, TTL Compatible

Data Ready	TTL Compatible; one at DVM reading rate and one ANDed function of DVM + Sample Timer Rate
Chopping Frequency	≈ 15 Hz
D / A Linearity	0.05% (25°C) of full scale 0.075% (0 - 70°C) of full scale
Power Requirements	+ 28 VDC, 130 W (Max.)
Dimensions	5-1/4" x 19" x 17"

ORIGINAL PAGE IS
OF POOR QUALITY

III) CIRCUIT DESCRIPTION

The OEM-1 has three printed circuit boards;

i) The Signal Processing and Chopper Electronics, PCB-080,

ii) The " Sequencer and Controller " board, PCB-078,

iii) The Power Supply board, PCB-079.

The functions of these boards are described in the following text.

A) SIGNAL PROCESSING AND CHOPPER

The light source is modulated by a stable chopper network consisting of a DC motor, the chopper blade, the rate detector, and the speed controller. The controller output is proportional to the error signal generated by the difference between the rate feedback and a stable internal reference signal. The modulated light is detected by the EMR photomultiplier tube (PMT) as it passed through the sample wheel apertures. The output of the PMT is channelled into a lock-in amplifier (to be supplied by NASA) which is synchronized to the modulation frequency of the chopper wheel. The chopper reference output signal is available at the OEM-1 front panel, labelled Chopper Monitor. The output of the lock-in amplifier must be positive with a maximum amplitude of + 10 V. For optimum ratio accuracy, the clear aperture signal, I_o, should be as close to + 10 VDC as possible. The lock-in amplifier is attached to the OEM electronic module via the buffer amplifier. The output of the buffer is made

ORIGINAL PAGE IS
OF POOR QUALITY

available at the front panel, labelled I_n. This output monitors the voltage of the lock-in signal and provides an analog output for each sample wheel position. The buffer output is connected to the analog divider and to the DVM (digital voltmeter) input relay. The DVM input relay is in the I_o position only when the sample wheel is in the clear aperture position. The clear aperture signal , I_o, is digitized and displayed on the 3-1/2 digit DVM. The BCD output I_o of the DVM is stored in the storage resistors until the system is either manually reset or the sample wheel has moved all the way around back to the I_o position. A 3-1/2 digit D / A converter is used to convert the digital I_o information back into the analog domain. The D / A output is maintained stable regardless of the length of the sample time selected. Thus, analog sample and hold amplifiers have been eliminated which would otherwise cause ratio errors due to the finite droop in their outputs.

Thus, the D / A output provides a stable and accurate I_o reference level for the analog divider. This output is also available at the front panel labelled I_o.

After the I_o has been digitized, stored and converted back to the analog domain, the DVM input relay is switched to the I_n / I_o position as the sample wheel indexes to a new position. Thus, the analog divider now has two inputs:

i) The stable, stored I_o level and,

ii) The different level corresponding to a new aperture position.

The output of the analog divider is digitized and displayed on the DVM. The ratio I_n / I_o, where I_n is the signal corresponding to the seven other aperture positions ($n = 1 \rightarrow 7$), is displayed sequentially as the stepper motor drives the sample wheel around to the initial I_o position. When the I_o position is reached again, the DVM selector switch is commanded to the I_o position. The new I_o value is digitized, stored and converted, as before, to provide a new I_o reference for the next revolution of the sample wheel.

If for any reason the I_n signal is greater than the I_o signal, the front panel Error light will illuminate. The could happen, for example, if the lock-in sensitivity was changed in the middle of the sample wheel indexing process. The front panel Overload indicator will illuminate if the signal input ever exceeds +10 VDC. These two indicators functions are also available in TTL levels for digital processing to indicate erroneous data.

Whenever the power is initially turned on or a reset command is given, the system will automatically seek the I_o position and store a new I_o value for the ratio comparison. The DVM's BCD outputs are available along with data ready transfer pulses and sample wheel position data. These outputs can be connected to external peripheral equipment for further storage and / or processing. The DVM's digital outputs include the I_o value and the ratio I_n / I_o ($n = 1 \rightarrow 7$).

B) SEQUENCER AND CONTROLLER

The control subsystem performs all the functions to properly correlate the sample wheel position and the signal being processed. To best understand the operation, refer to Figure # 1 and Figure # 2 for the following discussion.

When the unit is first turned on, a " power-on reset " command is initiated which enables the stepper motor index clock. This clock drives the stepper motor, via the motor driver circuitry, which in turn spins the sample wheel. In Figure # 2, position 4 was initially assumed. The stepper motor continues to index until the " 0 " (I_o) position is reached. Position sensors are used to distinguish the I_o position from the other positions. During this indexing process, the system registers are reset to zero to eliminate initial errors.

When the I_o position is reached, the I_o position sensor goes high and the " 0 " front panel light goes on. This enables the sample timer whose time interval can be selected at the front panel. The I_o position is maintained for the preselected sample time interval. On the leading edge of the subsequent sample timer output pulse, a couple of things happen:

i) A data ready (transfer) pulse is generated so that the digitized I_o data from the DVM can be stored in external peripheral equipment, and

ii) the DVM's BCD data is transferred into the storage register and stored until the next I_o position is reached.

ORIGINAL PAGE IS
OF POOR QUALITY

The D / A converter therefore maintains the stable analog signal at the input of the analog divider for the remaining cycle.

On the sample timer's output trailing edge, the stepper motor is commanded to index to the next (1) position. When the " 1 " position (referring to I_1 aperture) is reached, the " 1 " position light comes on. In addition, the DVM input relay is actuated to the I_n / I_o position. This switch position is maintained until the next I_o position is reached. Thus, the DVM displays the ratio of I_1 / I_o. The digitized I_1 / I_o information is strobed out to peripheral equipment when the leading edge of the next sample timer output pulse appears. This allows the digital output to be available only after the end of the integration time generated by the sample timer. The lock-in amplifier time constant should be selected in accordance with the sample timer setting. If desired, however, the digital output can be transferred at the DVM's reading rate (up to 10 readings / sec) since two data ready TTL levels are provided. One comes directly from the DVM and the other is an ANDed function of the DVM and the sample timer logic. The ANDed data ready level occurs after the motor indexes to a new position and the sample timer interval has expired. The position data decoder will always provide the necessary information to correlate the signal data with the position data.

This process continues sequentially and automatically until the next I_o position is reached. A new I_o value is again displayed and stored and the indexing process continues, as before. The time interval between the

ORIGINAL PAGE IS
OF POOR QUALITY

sample positions is controlled by a front panel switch with 1, 2, 5, 10, 20 and 50 second positions. Each position is displayed at the front panel by an illuminated LED indicator light.

The indexing process may be indefinitely held in the desired position by actuating the Interrupt switch.

This switch disables the sample timer. This switch can be used to stop the wheel without resetting it to the I_o position. Use this switch to stop the wheel when a new sample is to be installed or use it to integrate longer than the sample rate clock settings allow. If pressed while the stepper motor is indexing, the sample wheel will continue to the next position. The stepper motor has 15° indexing increments, thus three motor clock pulses are required to index the sample wheel to the next aperture position.

When the Interrupt switch is deactivated, the sample wheel will advance to a new position and continue at the selected sample rate.

If the Reset switch is actuated, the stepper motor will index until the " 0 " position is reached. The storage register and the position data counter will be reset to zero. Therefore, by using the reset and/or the Interrupt switches the operator may manually control the operation and select and maintain any position as long as desired. The front panel positional information as well as visual display of the I_o, and I_n / I_o ratio values provide a functional instrument which is ready to use. Analog outputs for I_o, I_n and I_n/I_o are provided. The rear panel provides for the power supply input of + 28 VDC, protection fuses, digital outputs and the OEM module interfacing connector.

C) POWER SUPPLY

The OEM-1 requires + 5 V, + 15 V, - 15V, and the incoming + 28 VDC for operation. The + 5 V and ± 15 V sources are generated and regulated by PCB-079. The board provides stable DC outputs with line and load regulation of about 0.01% on all outputs. Both the ± 15 VDC outputs are capable of supplying 100 mA, whereas the + 5 VDC output can supply up to 2 A. The - 15 VDC output is achieved by utilizing a 10 kHz oscillator which drives an inverter transformer. The output of this transformer is rectified, filtered and regulated at - 15 VDC. The + 5 VDC and + 15 VDC are current limited at 2 A and 100 mA respectively.

IV) OPERATING INSTRUCTIONS

A) FRONT PANEL

The front panel contains the control switches, the position, overload and error indicators, the digital display, the signal input, the chopper monitor output, and three analog output monitors. Each of these functions will be discussed in the following text.

Power On: This switch applies the + 28 VDC to the system. No warm-up time is required.

Reset: This switch when actuated will cause the sample wheel to index continuously until the I_o wheel position is detected. When the I_c position is reached, the sample sheel will proceed at a rate governed by the Sample Time switch.

The Reset Light will come on when the power is initially applied to the system unless the sample wheel is already in the I_o position. Therefore, the OEM-1 will command the sample wheel to seek out the I_o position when the unit is first turned on or whenever this switch is actuated.

Interrupt: This switch can be used to stop the sample wheel indefinitely at any position desired. If actuated, however, during an indexing cycle, the sample wheel will continue the next position and then stop. This function allows for sample replacement or longer integration times than provided by the

ORIGINAL PAGE IS
OF POOR QUALITY

front panel Sample Time switch. When this switch is deactivated, the sample wheel will immediately advance to the next position. If this switch is depressed after the reset command is initiated, the I_o position will be reached and maintained. To index to, and hold the next position, simply deactivate the Interrupt switch and immediately activate it again.

Sample Timer (seconds): This rotary switch selects the integration time of the sample position. The times provided are 1, 2, 5, 10,20, and 50 seconds. The timer starts when the sample wheel reaches a new apperture position. At the end of the timer cycle, a data ready strobe is generated and " ANDed " with the DVM data ready TTL level. This ANDed data ready signal is provided at the digital output connector. The sample wheel indexes to a new position at the end of the timer cycle.

Position Indicators: There are eight LED indicators that show the wheel position. When the Reset light is on, these LED's may be invalid. However, when the I_o position is reached the " 0 " light will illuminate, thus resetting the position counter to the proper state. As the sample wheel indexes, these LED's will sequentially illuminate to show the correct sample position. The position is also available in BCD format at the CP2 connector on the rear panel.

Digital Display: This 3-1/2 digit DVM has a full scale sensitivity of ± 19.99 V. The decimal point is fixed between the first and second MSB digits, e.g. 1.000. In the I_o position the DVM reads the lock-in output directly. The I_o signal should be as close to + 10 V as possible for maximum

ORIGINAL PAGE IS
OF POOR QUALITY

ratio accuracy. In the $I_1 \rightarrow I_7$ positions, the ratio I_n / I_o is displayed where $n = 1 \rightarrow 7$. The DVM display is provided in BCD, TTL compatable levels at CP2 on the rear panel. The DVM data ready strobe is also provided if readings at the DVM reading rate are desired.

Overload: This LED indicator will come on if the signal input exceeds + 10 VDC. The overload conditions is also available in digital form at CP2 on the rear panel.

Error: This LED indicator will illuminate if the I_n signal is greater than the clear aperture position signal. This function is also available in digital TTL compatable form at CP2 on the rear panel.

Signal Input: This floating BNC is to be connected to the NASA supplied lock-in amplifier. The output of the lock-in amplifier should be close to + 10 V in the I_o position for the best ratio accuracy. The overload light will come on if the input voltage exceeds + 10 V. Do not apply a negative input polarity.

Chopper Monitor: This floating BNC provides the chopper reference for the lock-in amplifier. The output is 50% duty cycle and is a TTL output level.

I_o: This floating BNC provides an analog output of the stored I_o signal. This signal remains stable over the complete sample wheel indexing cycle. When a new I_o position is reached, this I_o signal level may change to correspond to the new I_o signal level. Do not load this output down, use equipment with at least 10 kohm input impedance when measuring this output.

I_n: This floating BNC connector essentially provides the lock-in output (same as signal input) signal at the front panel. However, this output is after the buffer amplifier and is the exact voltage that is applied to the analog divider circuitry. The signal input and the I_n output will vary by the amount of offset and attenuation contributed by the buffer amplifier. Use at least 10 kohm input impedance measuring equipment.

I_n / I_o: This floating BNC provides the output directly from the analog divider. This analog signal is directly coupled internally to the DVM in the $I_1 \rightarrow I_7$ positions. Use at least 10 kohm input impedance measuring equipment.

B) BACK PANEL

The back panel provides the input power connections, fuses, and the connectors for digital outputs and OEM housing interfacing. Each will be briefly discussed.

Input Power Barrier Strip: The OEM-1 requires an + 28 VDC input. A two terminal barrier strip is provided to interface the OEM-1 to an external power supply. Make sure the external supply is properly connected, otherwise damage to the OEM-1 may result.

F1: This 5A fuse is the main line fuse and protects the OEM-1 from system overloads and short circuits.

F2: This 1/2 A fuse protects the chopper motor.

F3: This 1-1/2 A fuse protects the DC power supply PCB-078.

F4: This 1/4 A fuse protects the photomultiplier tube power supply.

CP1: This 24 pin cannon connector provides all the interfacing necessary between the sample wheel assembly and the OEM-1 electronic chassis. See Table I for the pin assignments.

CP2: This 24 pin ribbon connector provides all the BCD, TTL compatible data line necessary to interface with the external peripheral equipment. See Table II for the pin assignments.

V) CALIBRATION PROCEDURE

A) SAMPLE TIMER CALIBRATION

There are six single turn trim-pots on the sequencer and controller printed circuit board, PCB-078, which allow calibrating the sample timer. The trimpots are labelled " 1S " through " 50S " corresponding to their respective timer positions. To calibrate, follow this procedure:

i) Using an oscilloscope of the interval counter, look at pin 9 of U15, and pin 3 of U5.

ii) Select the desired sample timer position and allow the sample wheel to index. Adjust the appropriate trim-pot so that the time between the pulses at these pins corresponds to the selected time position.

B) CHOPPER SPEED ADJUSTMENT

The chopper speed adjustment is located on the " Analog Divider and Chopper " printed circuit board, PCB-080. Follow this procedure to adjust the chopper speed.

i) Remove the power supply printed circuit board, PCB-079, for access to the speed adjustment.

i) con't

Make sure this board is supported and insulated from the surrounding circuitry so it does not short out.

ii) Adjust trim-pot labelled " R41, Chop. Rate " on PCB-080 while observing the chopper monitor BNC output. If this pot is adjusted to an excessively low speed, the chopper wheel will pulse irratically, if adjusted too high, the speed regulation will be affected. A chopping frequency of about 15 Hz is desired for proper stability.

C) DAC OFFSET AND FULL SCALE ADJUSTMENT

These adjustments also include the DAC output amplifier balance adjustment. Follow these steps for correct DAC adjustments.

i) Remove the power supply board, PCB-079, for access to the DAC and the trim-pots. Insulate this board from the surrounding circuitry.

ii) Allow the sample wheel to index to the I_o position. Actuate the Interrupt switch so that the wheel can be manually turned for the following steps.

iii) With the sample wheel in the I_o position, check pins 12, 13, 14, 15 of U3, U4 and U5 and pin 15 of U2 to make sure the

storage resistors are reset to zero. If they are, use a 4-1/2 digit DVM with a resolution of 100 μV and observe pin 30 of 3-1/2 digit DAC. This DAC output can be zeroed by adjusting the trimpot labelled " R4, Offset Adj. ". Adjust R4 so that the DAC is as near to zero as possible. Connect the DVM common lead to the analog ground on PCB-080.

iv) With the DAC zeroed as close to zero as possible, observe the output of U6 at Pin 6. Adjust the trim-pot labelled " U6 Bal." so that it reads the same as pin 30 of the DAC. Thus, pin 6 of U6 should also read very close to zero volts.

v) With a stable external power supply, apply + 10.00 VDC to the signal input BNC. The DVM should read 1.000 (corresponding to + 10.00 V). Make sure the DVM reads exactly 1.000. Now, manually turn the sample wheel to the I_1 position. Pin 15 of U2 should now be a logic 1, and pins 12, 13, 14 and 15 of U3, U4 and U5 should be a logic 0. Adjust the trim-pot labelled " R5, F.S. Adj. " reads + 10.000 V on the 4-1/2 digit DVM.

VI) TROUBLESHOOTING PROCEDURE

A few brief suggestions listed below may help in locating system problems. This list is not intended to cover all the possible symptoms and causes, but it should cover some of the most likely ones. Refer to the indicated schematics when specified. All voltages are referred to chassis common.

SYMPTOM		PROBABLE CAUSE & SOLUTION	
1)	No system power	a)	Check F1 and replace if necessary. Investigate the cause of failure.
		b)	Make sure the input DC lines are properly connected.
2)	The position indicators show the wrong position	a)	If the wheel is obstructed this will cause a wrong count.
		b)	A varying + 28 VDC input may slow the stepper motor sufficiently to cause timing problems. Use a solid + 28 VDC source.
3)	The sample timer is not calibrated.	a)	Recalibrate as discussed in Chapter V, A.
4)	The DVM ratio readout is in error and/or may exceed 1.000.	a)	At small I_o signal input levels the DAC accuracy will reduce the accuracy of the ratio measurement. For the best accuracy, keep the I_o signal level as close to + 10 V as possible.
		b)	The accuracy of the analog divider falls off steeply for I_o < 100 mV.

5)	The chopper rate is irratic or drifts randomly	a)	If the chopper rate trim-pot R41 on PCB-080 is adjusted too low or too high a loss of regulation will occur. Select a rate of about 15 Hz.
		b)	A rapidly varying + 28 VDC input may cause random variations in the chopping frequency.
6)	The ratio output inaccuracy seems to be excessive	a)	Recalibrate the DAC and its associated amplifier U6, by the procedure discussed in Chapter V, C.
		6)	For best results, keep the I signal level as close to + 10 V as possible.
7)	The chopper motor is not running	a)	Check F2
8)	No Photomultiplier output is detectable	a)	Check F4
		b)	Do not damage the PMT by flooding it excessively with the lamp source.
9)	The stepper motor does not stop at the correct wheel position (detent)	a)	Tighten the set-screws in the shaft-to-wheel coupler assembly
		b)	Adjust the detent to match the sample wheel grooves
		c)	Adjust the pulse width of U13 $T_w = 1.1$ (R49) (C33) so that the trailing edge of the pulse occurs after the sample wheel stops oscillating (after being pulsed) and before the next motor step command is determined by U13 Pin 5.

TABLE I

CP 1, OEME TO OEMCP INTERFACE

PIN #	FUNCTION
A	Open
B	Open
C	Open
D	Open
E	Chopper LED Anode
F	Chopper LED Cathode & Chopper Photo-transistor emitter
G	Chopper Photo-transistor collector
H	Photomultiplier P.S. +28 V
J	Photomultiplier P.S.; Ground
K	I_o LED Anode
L	I_n LED Anode
M	I_o & I_n LED cathodes & I_o & I_n Photo-transistor emitters
N	I_o Photo-transistor collector
P	I_n Photo-transistor collector
R	Open
S	Ground
T	Ground
U	Ground
V	Chopper motor shield return
W	Stepper motor shield
X	Chopper motor (L)
Y	+28 VDC Chopper motor (H)
Z	+28 VDC Stepper Motor (H)
	Stepper Motor (L)

TABLE II

CP2, DIGITAL OUTPUTS

PIN #	FUNCTION
1	Data Ready (OEM + DVM)
2	Position BCD: 4
3	Position BCD: 2
4	Position BCD: 1
5	Error
6	Analog Overload
7	Read Enable
8	Data Ready (DVM)
9	+ Polarity
10	DVM Overflow
11	BCD: 1000
12	BCD: 800
13	BCD: 400
14	BCD: 200
15	BCD: 100
16	BCD: 80
17	BCD: 40
18	BCD: 20
19	BCD: 10
20	BCD: 8
21	BCD: 4
22	BCD: 2
23	BCD: 1
24	Digital Ground

PRECEDING PAGE BLANK NOT FILMED

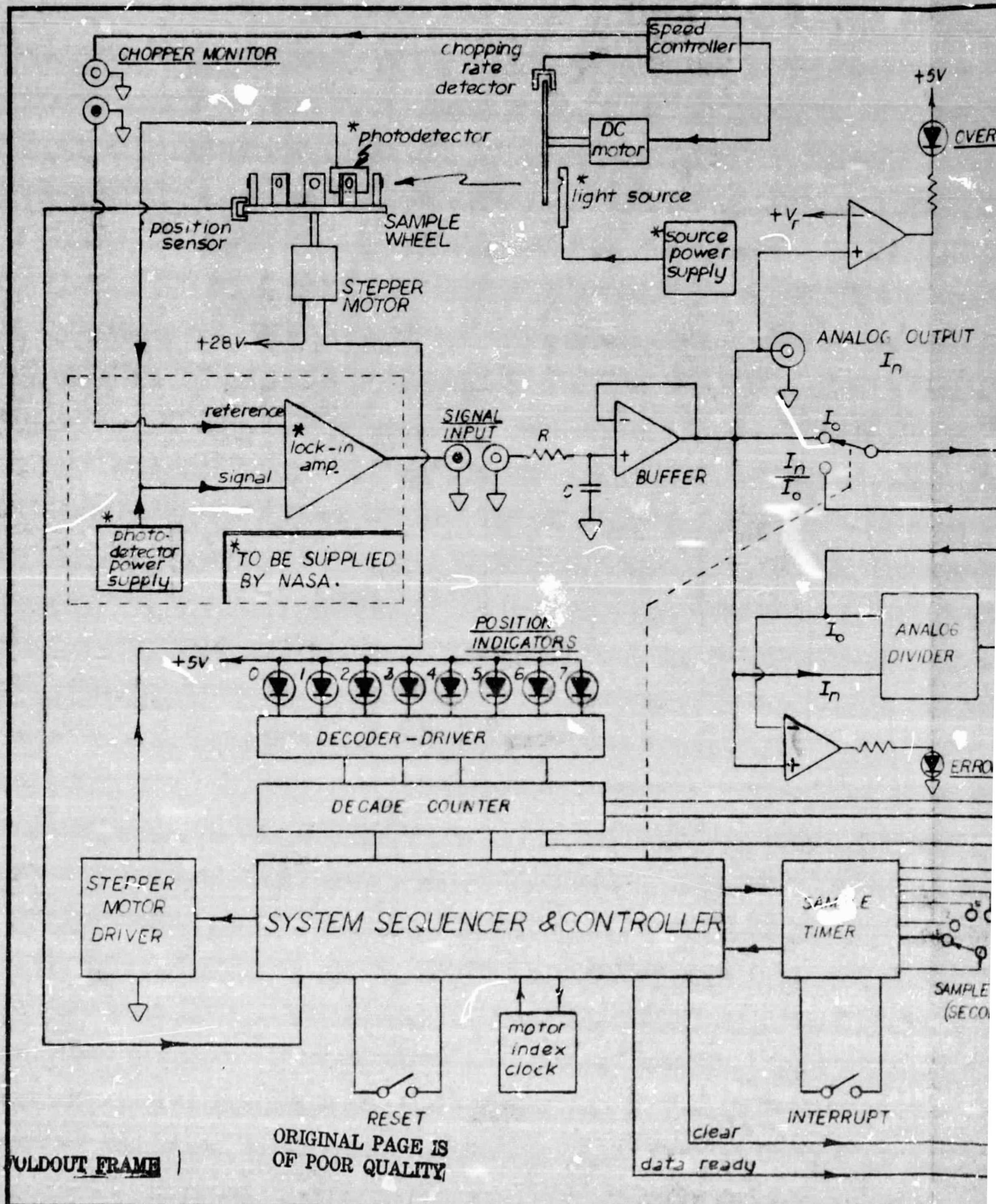

FOLDOUT FRAME

ORIGINAL PAGE IS OF POOR QUALITY

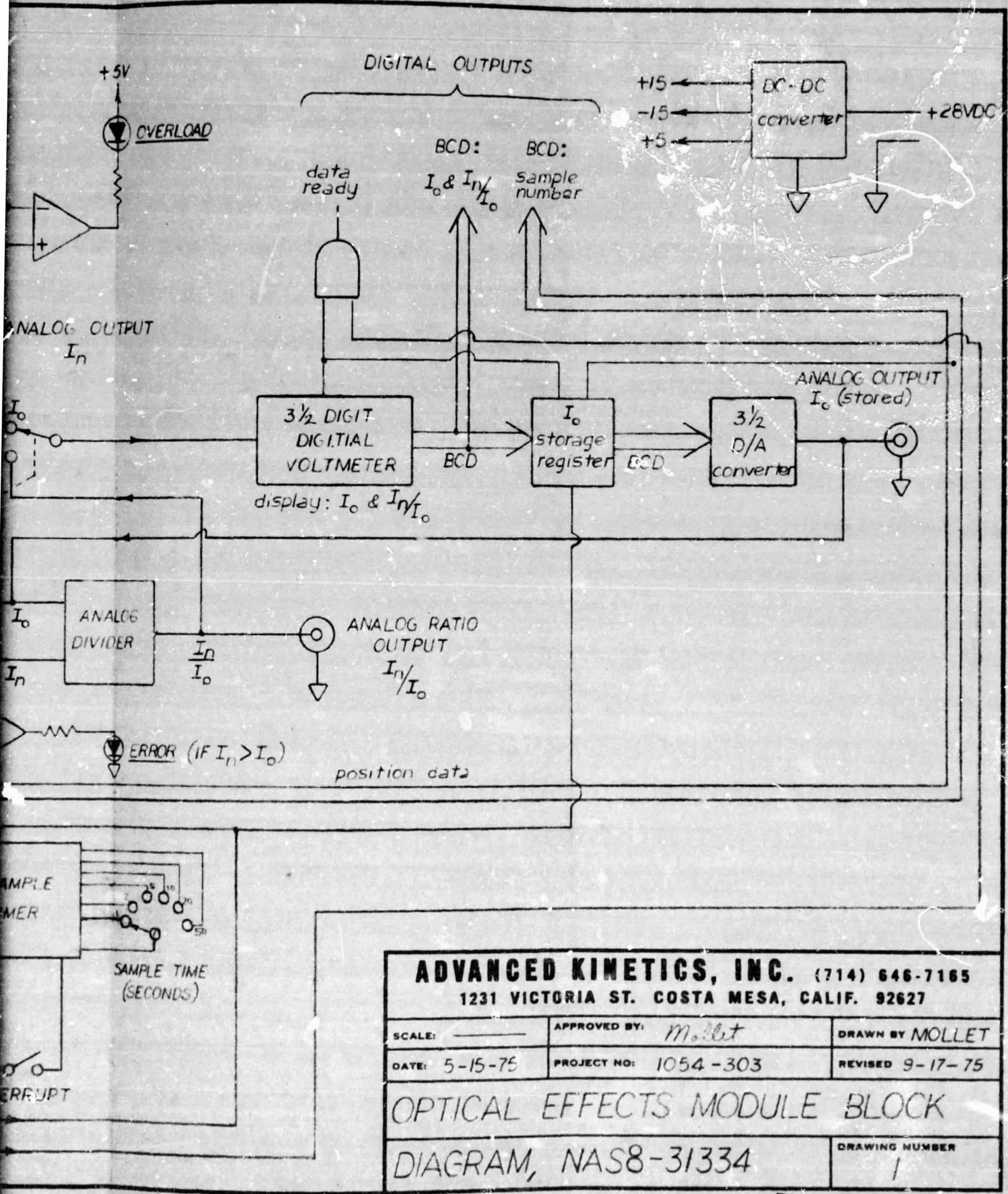

ADVANCED KINETICS, INC. (714) 646-7165 1231 VICTORIA ST. COSTA MESA, CALIF. 92627		
SCALE: ———	APPROVED BY: M.Mct	DRAWN BY MOLLET
DATE: 5-15-75	PROJECT NO: 1054-303	REVISED 9-17-75
OPTICAL EFFECTS MODULE BLOCK DIAGRAM, NAS8-31334		DRAWING NUMBER 1

FOLDOUT FRAME 2

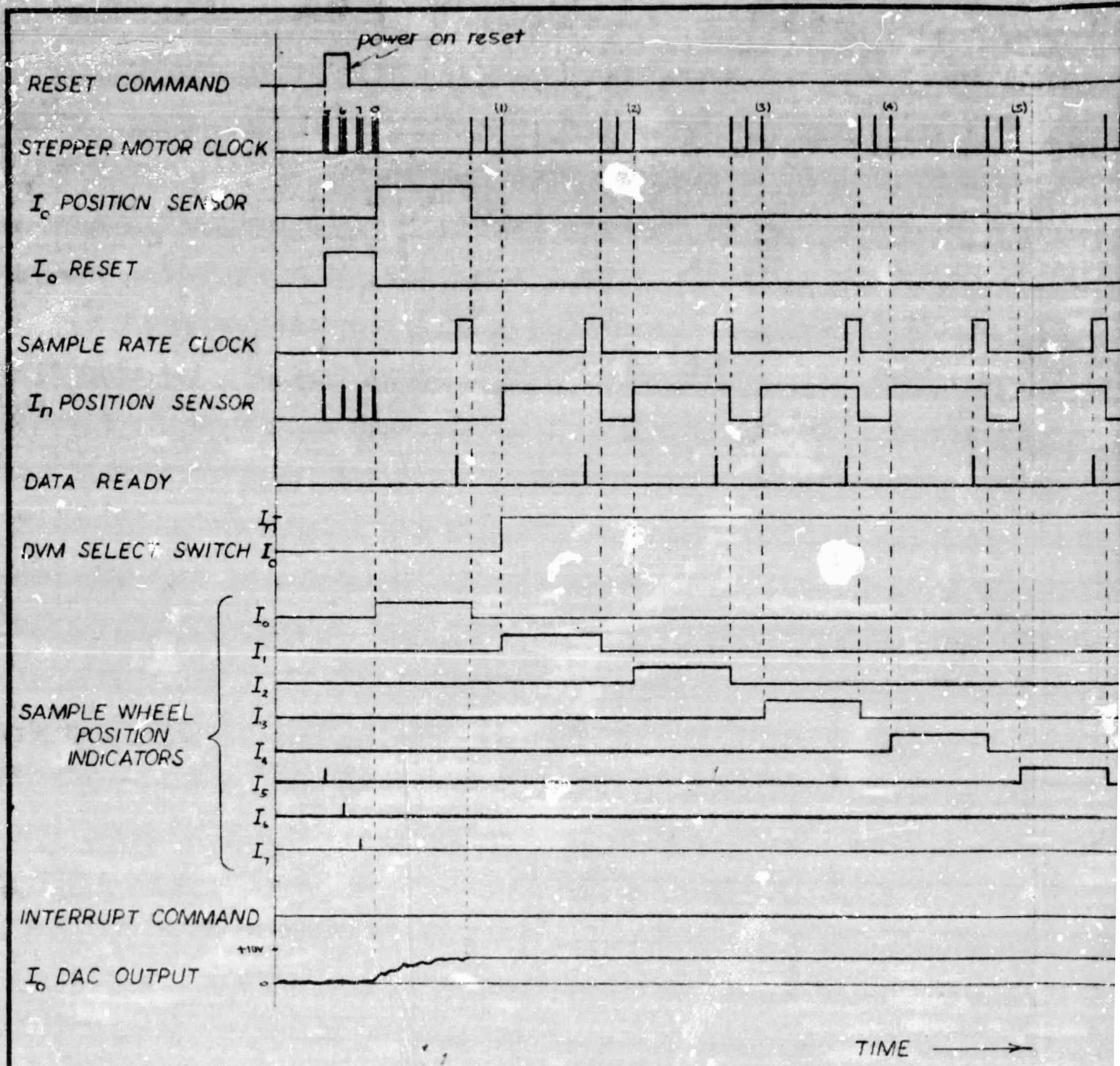

FOLDOUT FRAME 1

ORIGINAL PAGE IS
OF POOR QUALITY

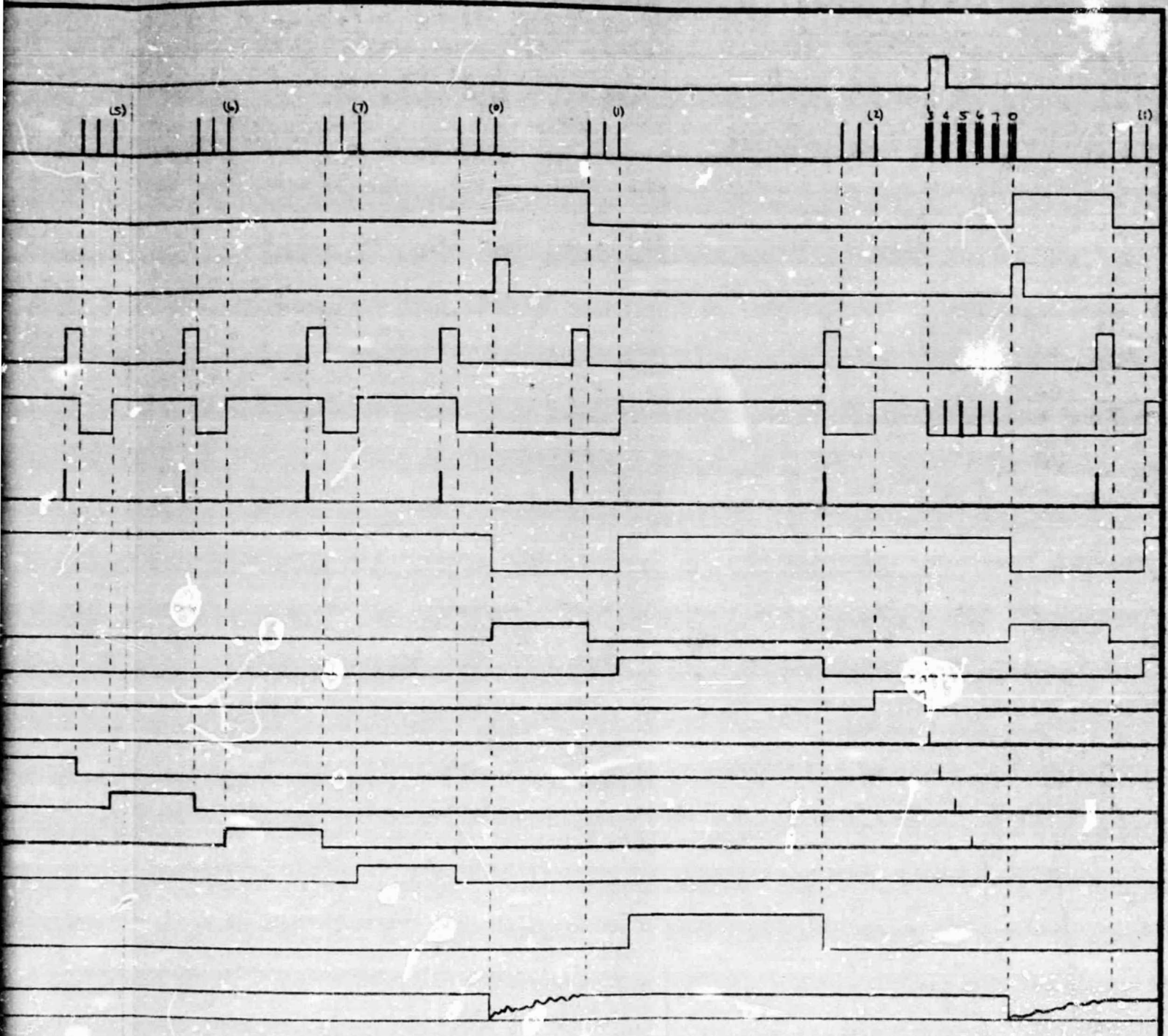

ADVANCED KINETICS, INC. (714) 646-7165
1231 VICTORIA ST. COSTA MESA, CALIF. 92627

SCALE: ———	APPROVED BY: Mollet	DRAWN BY MOLLET
DATE: 5-15-75	PROJECT NO: 1054-303	REVISED

CEM SEQUENCER TIMING DIAGRAM

NAS8-31334 FOLDOUT FRAME 2

DRAWING NUMBER 2

FOLDOUT FRAME 1

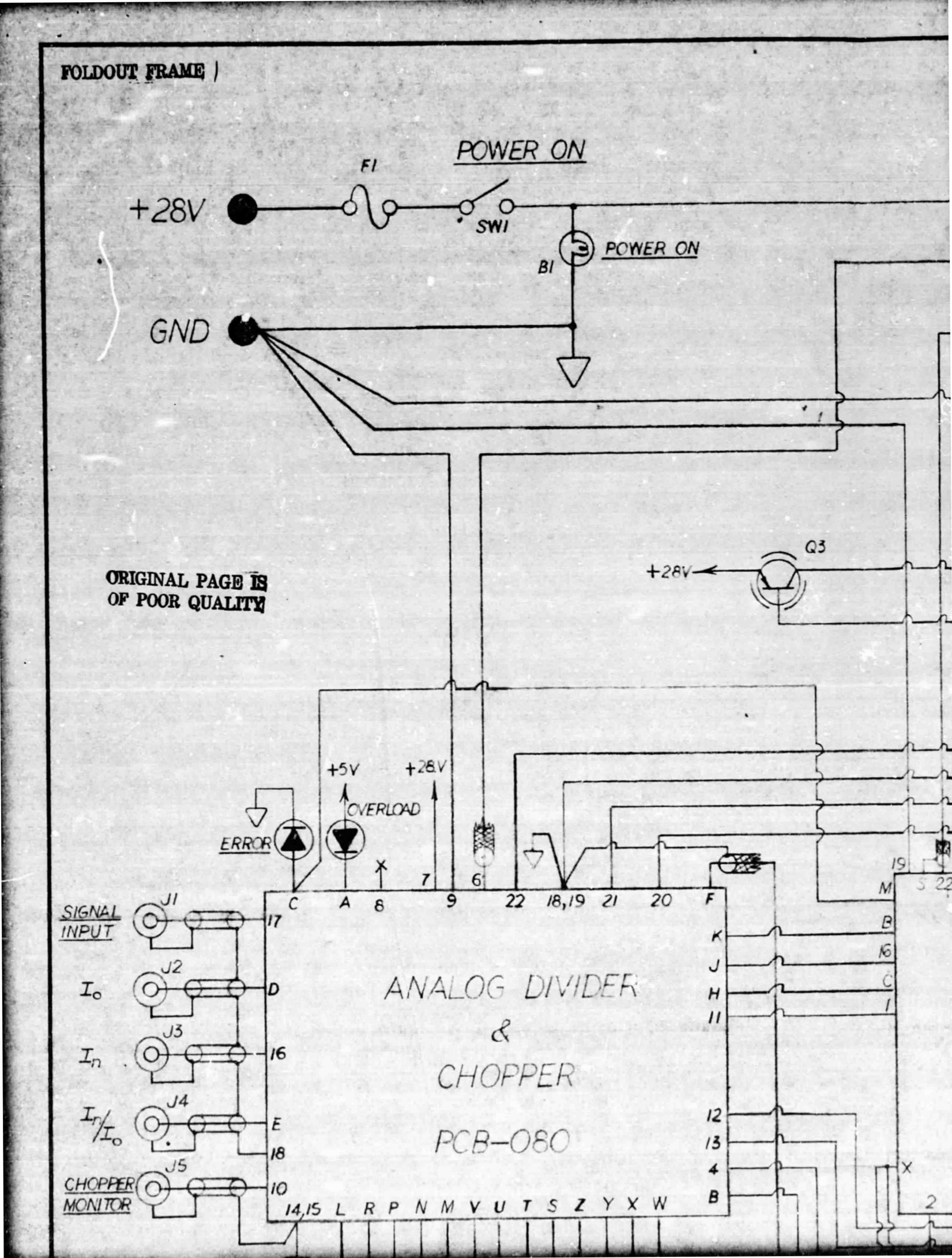

FOLDOUT FRAME 2

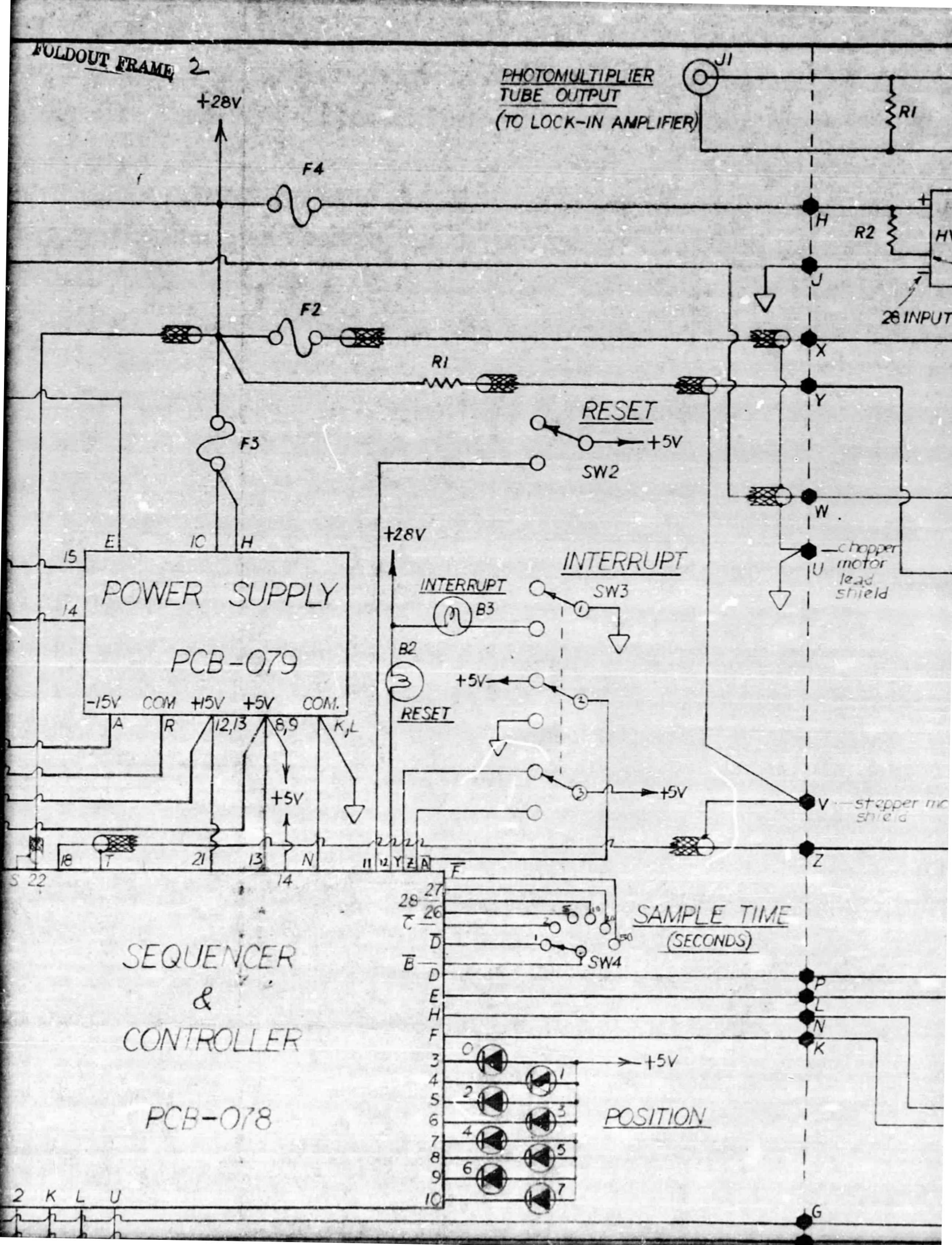

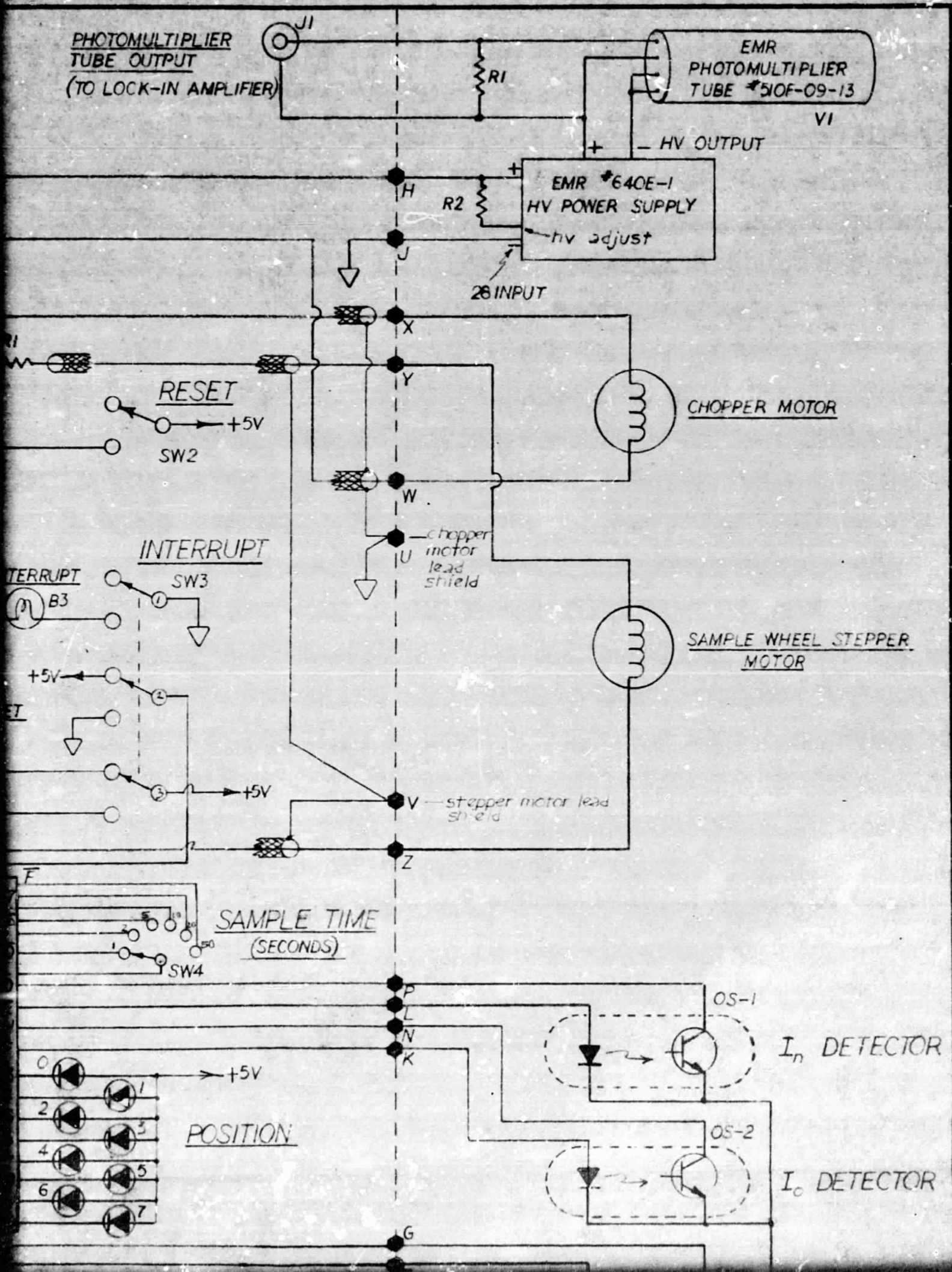
PHOTOMULTIPLIER TUBE OUTPUT (TO LOCK-IN AMPLIFIER)
J1
R1
EMR PHOTOMULTIPLIER TUBE #510F-09-13
V1
+
– HV OUTPUT
H
R2
EMR #640E-1 HV POWER SUPPLY
hv adjust
J
28 INPUT
X
Y
RESET
+5V
SW2
CHOPPER MOTOR
W
U
chopper motor lead shield
INTERRUPT
SW3
B3
SAMPLE WHEEL STEPPER MOTOR
+5V
+5V
V
stepper motor lead shield
Z
F
SAMPLE TIME (SECONDS)
SW4
P
L
N
K
OS-1
I_n DETECTOR
+5V
POSITION
OS-2
I_o DETECTOR
G

ORIGINAL PAGE IS
OF POOR QUALITY

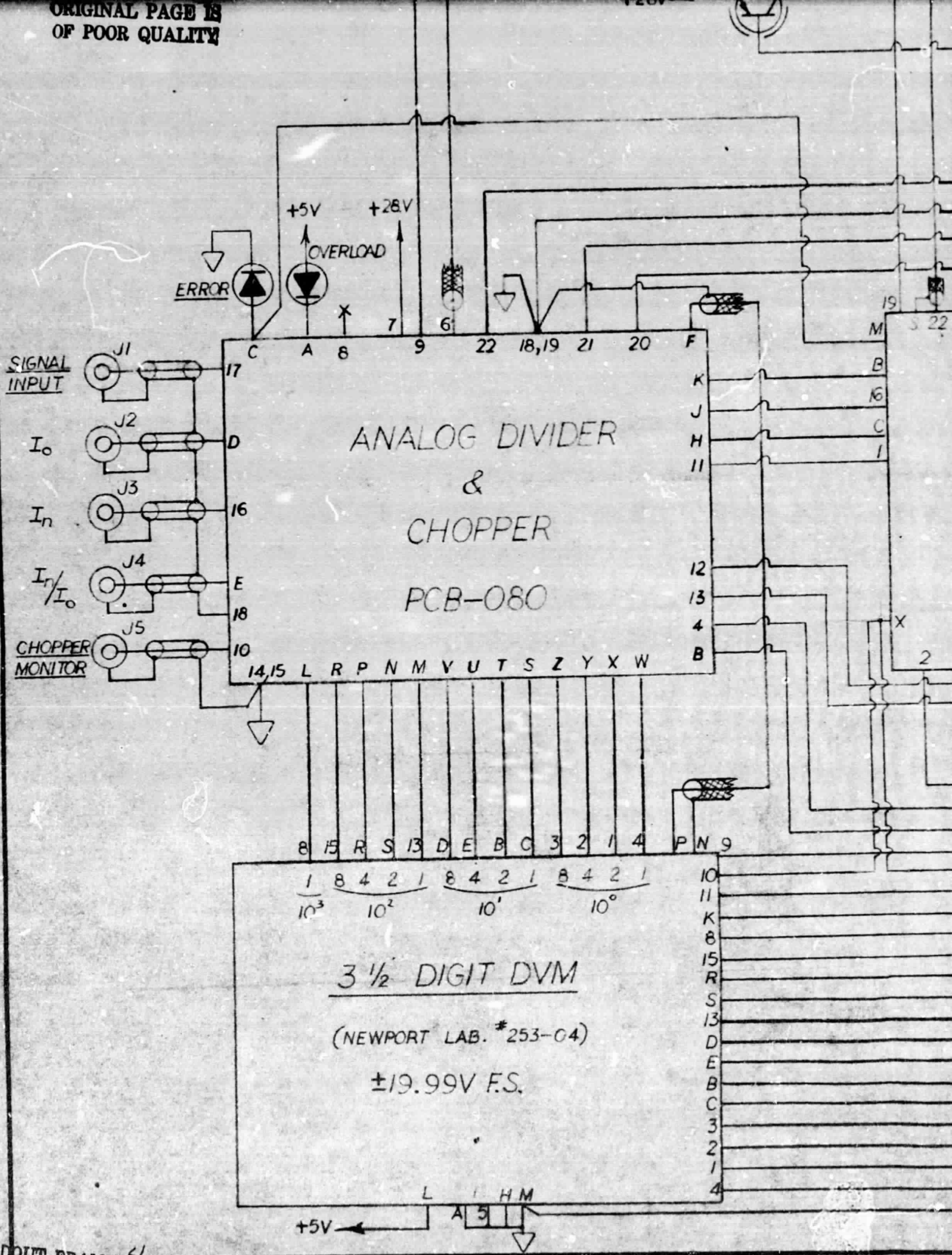

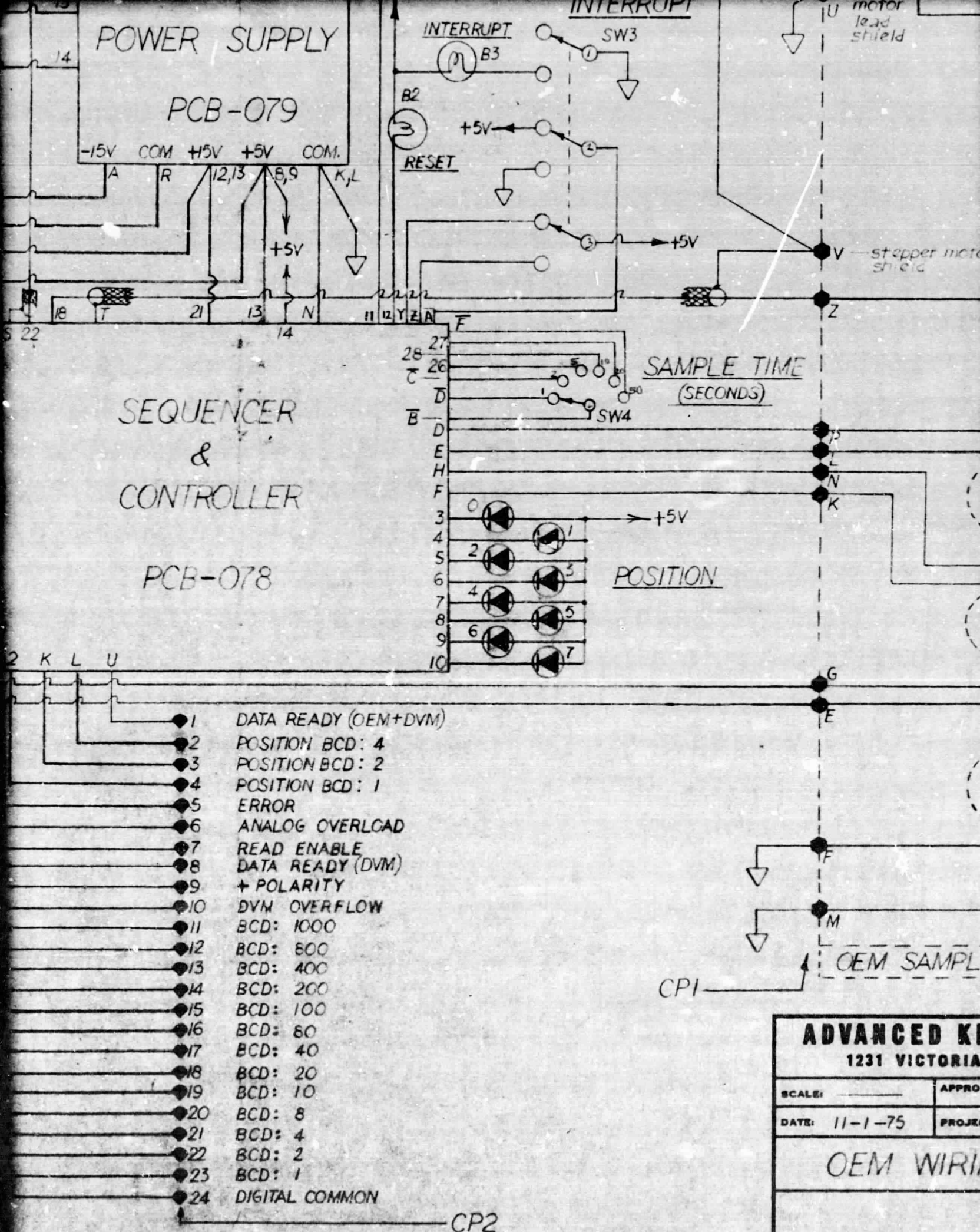

FOLDOUT FRAME 5

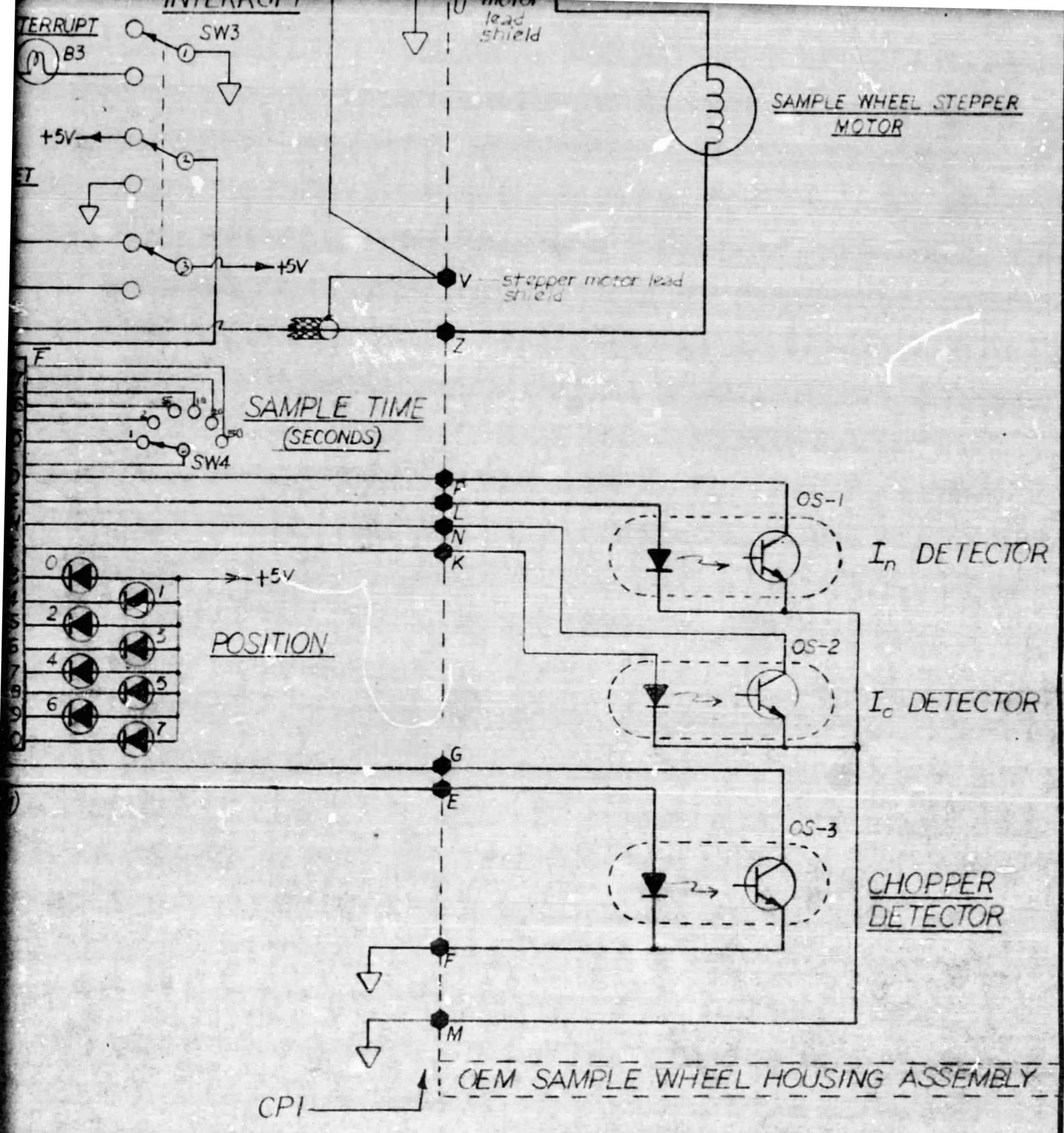

ADVANCED KINETICS, INC. (714) 646-7165 1231 VICTORIA ST. COSTA MESA, CALIF. 92627		
SCALE: ——	APPROVED BY: Mollet	DRAWN BY MOLLET
DATE: 11-1-75	PROJECT NO: 1054-303	REVISED
OEM WIRING SCHEMATIC		
(OEM)		DRAWING NUMBER 3

FOLDOUT FRAME 6

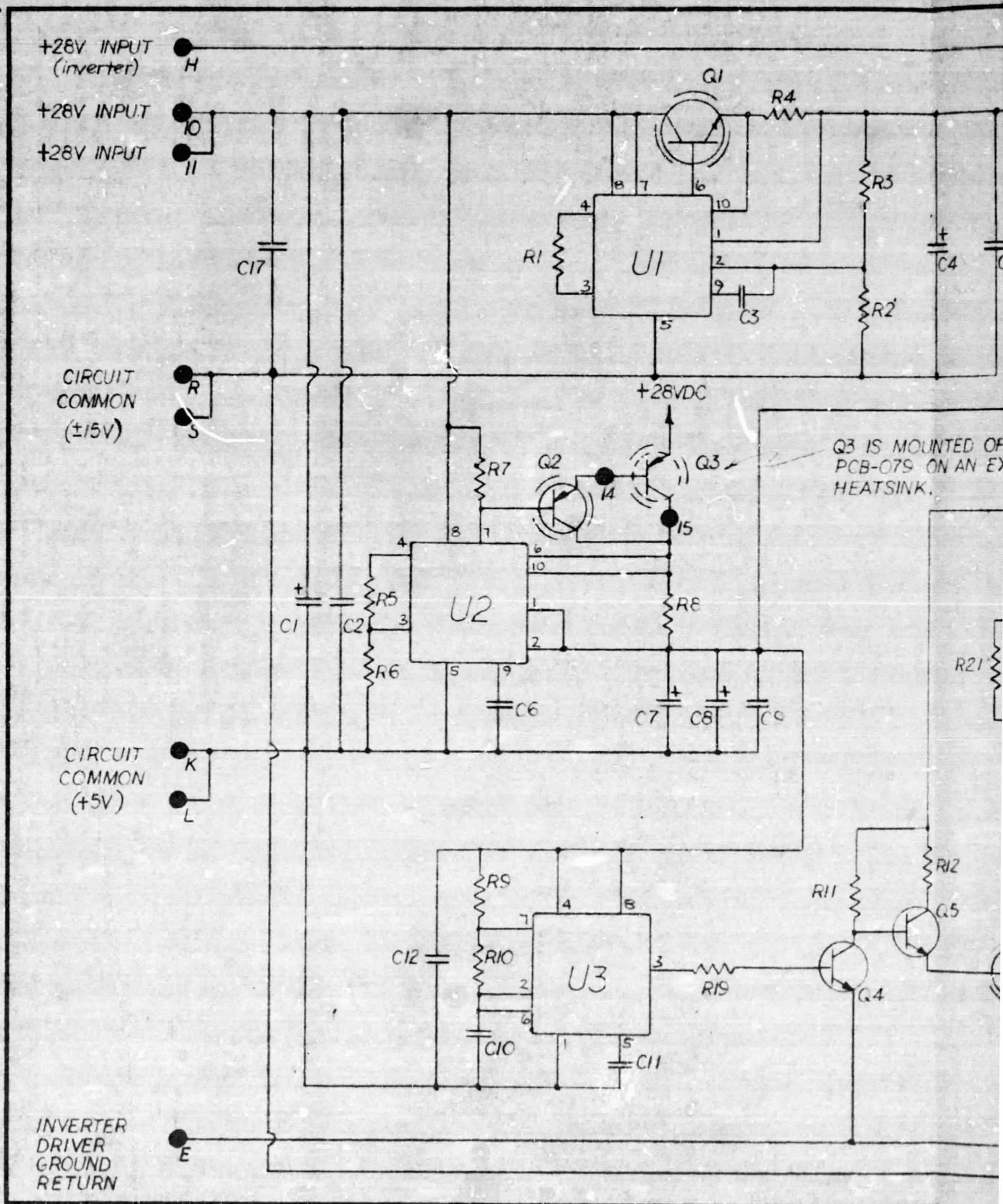
+28V INPUT (inverter)
H
+28V INPUT
10
+28V INPUT
11
CIRCUIT COMMON (±15V)
R
S
CIRCUIT COMMON (+5V)
K
L
INVERTER DRIVER GROUND RETURN
E
Q1
R4
R3
R2
R1
U1
C17
C4
C3
+28VDC
Q2
Q3
R7
14
15
Q3 IS MOUNTED ON
PCB-079 ON AN EX
HEATSINK.
U2
R5
R6
R8
C1
C2
C6
C7
C8
C9
R21
R9
R10
U3
C12
C10
C11
R19
R11
R12
Q5
Q4

OUT FRAME

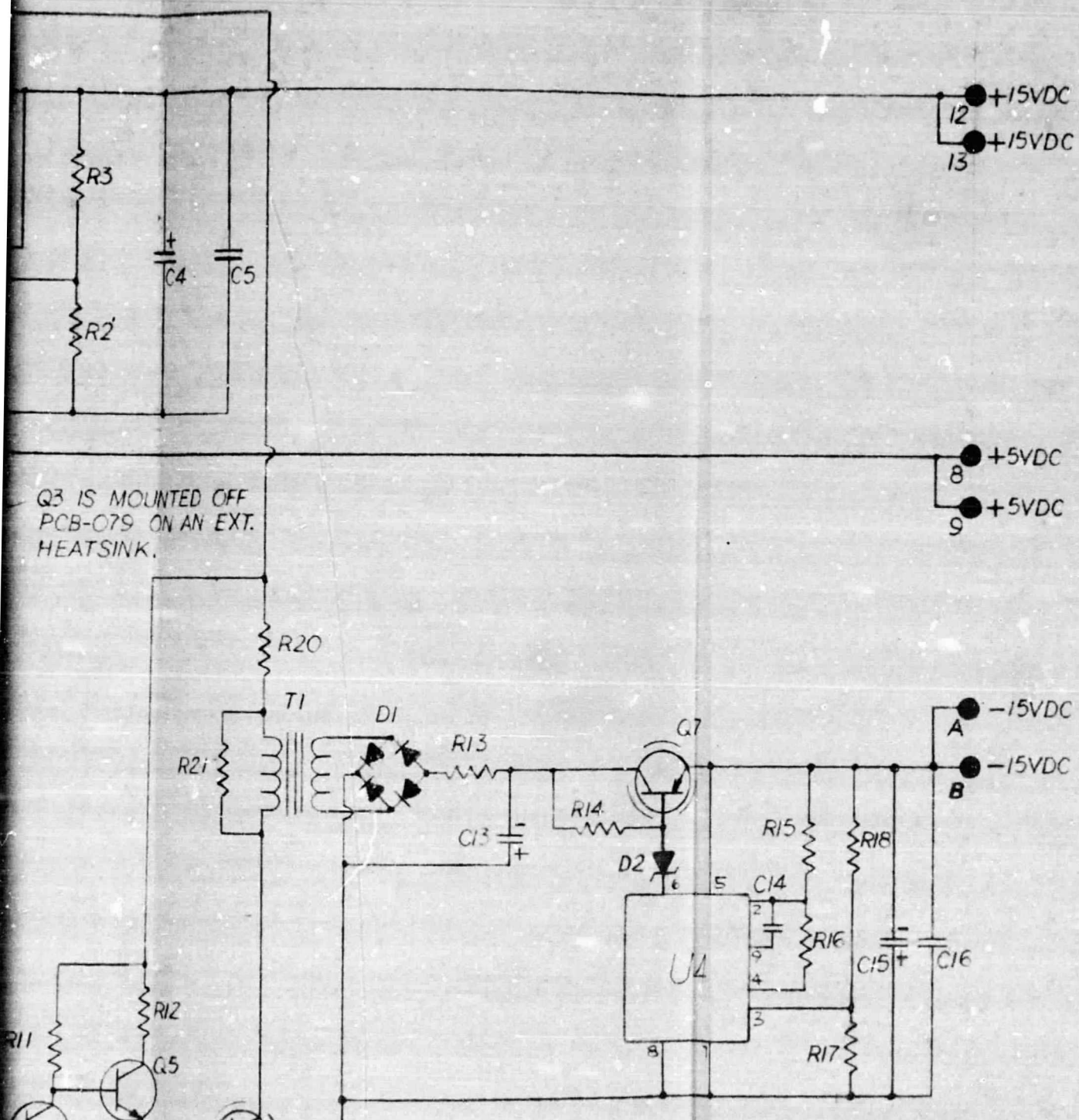

ADVANCEDKINETICS, INC. (714) 646-7165
1231 VICTORIA ST. COSTA MESA, CALIF. 92627

SCALE: ———	APPROVED BY: Mollet	DRAWN BY MOLLET
DATE: 10-29-75	PROJECT NO: 1054-303	REVISED

OEM POWER SUPPLY

PCB-079 (OEM) DRAWING NUMBER 4

FOLDOUT FRAME 2

FOLDOUT FRAME 1

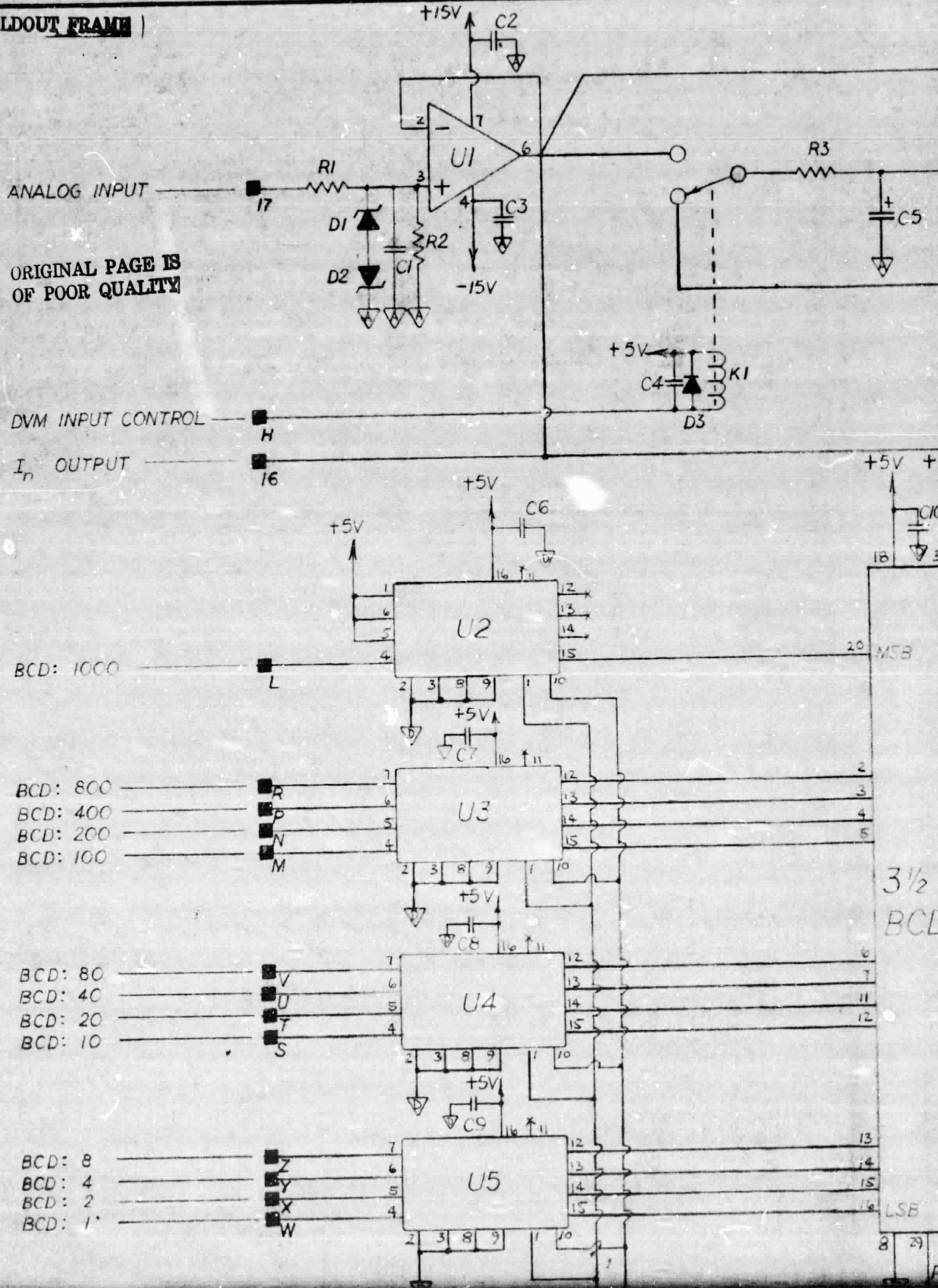

ORIGINAL PAGE IS
OF POOR QUALITY

FOLDOUT FRAME 2

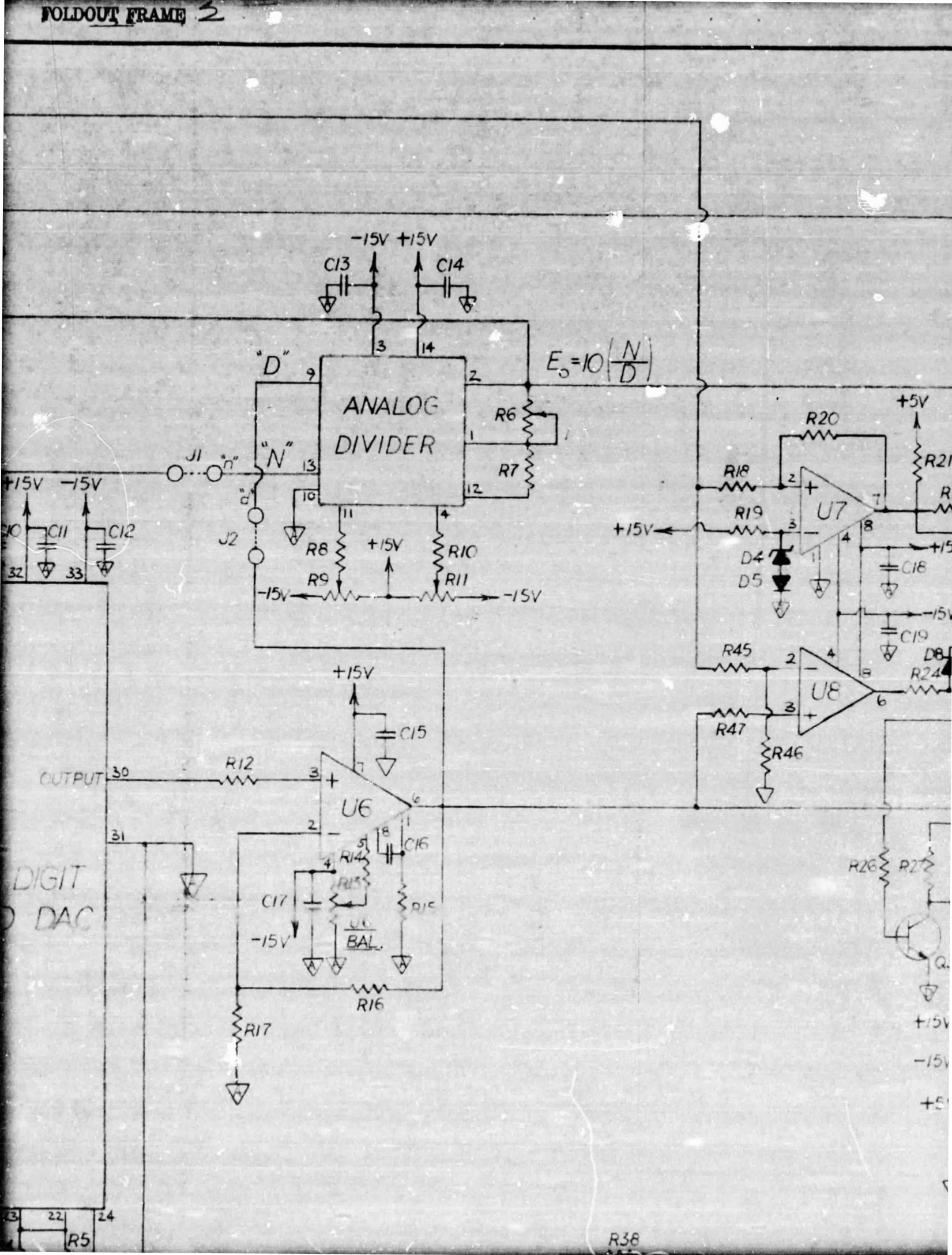

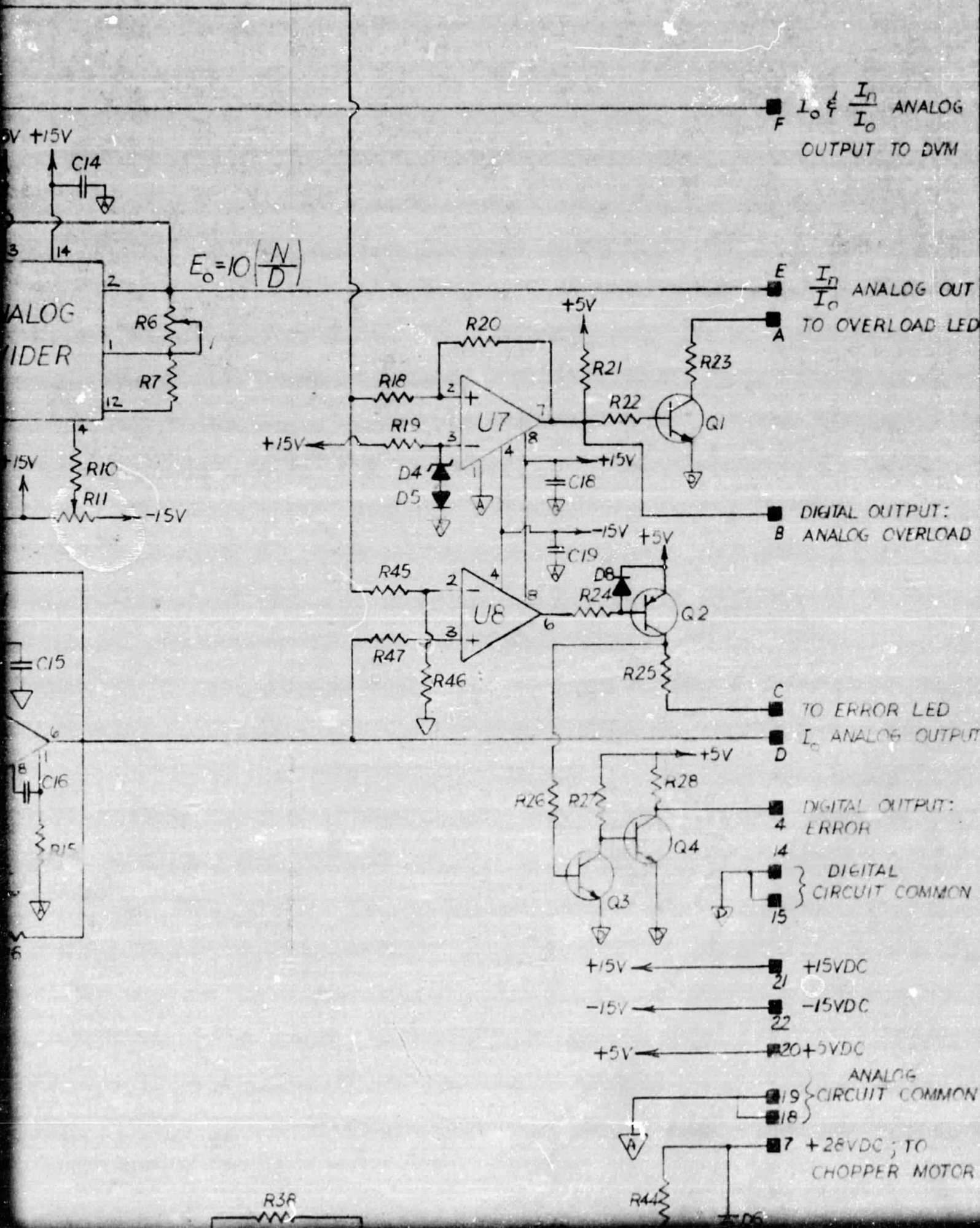
F
I_o & $\frac{I_n}{I_o}$ ANALOG OUTPUT TO DVM
E
$\frac{I_n}{I_o}$ ANALOG OUT
A
TO OVERLOAD LED
B
DIGITAL OUTPUT: ANALOG OVERLOAD
C
TO ERROR LED
D
I_o ANALOG OUTPUT
4
DIGITAL OUTPUT: ERROR
14
15
DIGITAL CIRCUIT COMMON
21
+15VDC
22
-15VDC
20
+5VDC
19
18
ANALOG CIRCUIT COMMON
7
+28VDC ; TO CHOPPER MOTOR
$E_o = 10\left(\frac{N}{D}\right)$
U7
U8
R6
R7
R10
R11
R18
R19
R20
R21
R22
R23
R24
R25
R26
R27
R28
R44
R45
R46
R47
C14
C15
C16
C18
C19
D4
D5
D8
D6
Q1
Q2
Q3
Q4
+15V
-15V
+5V

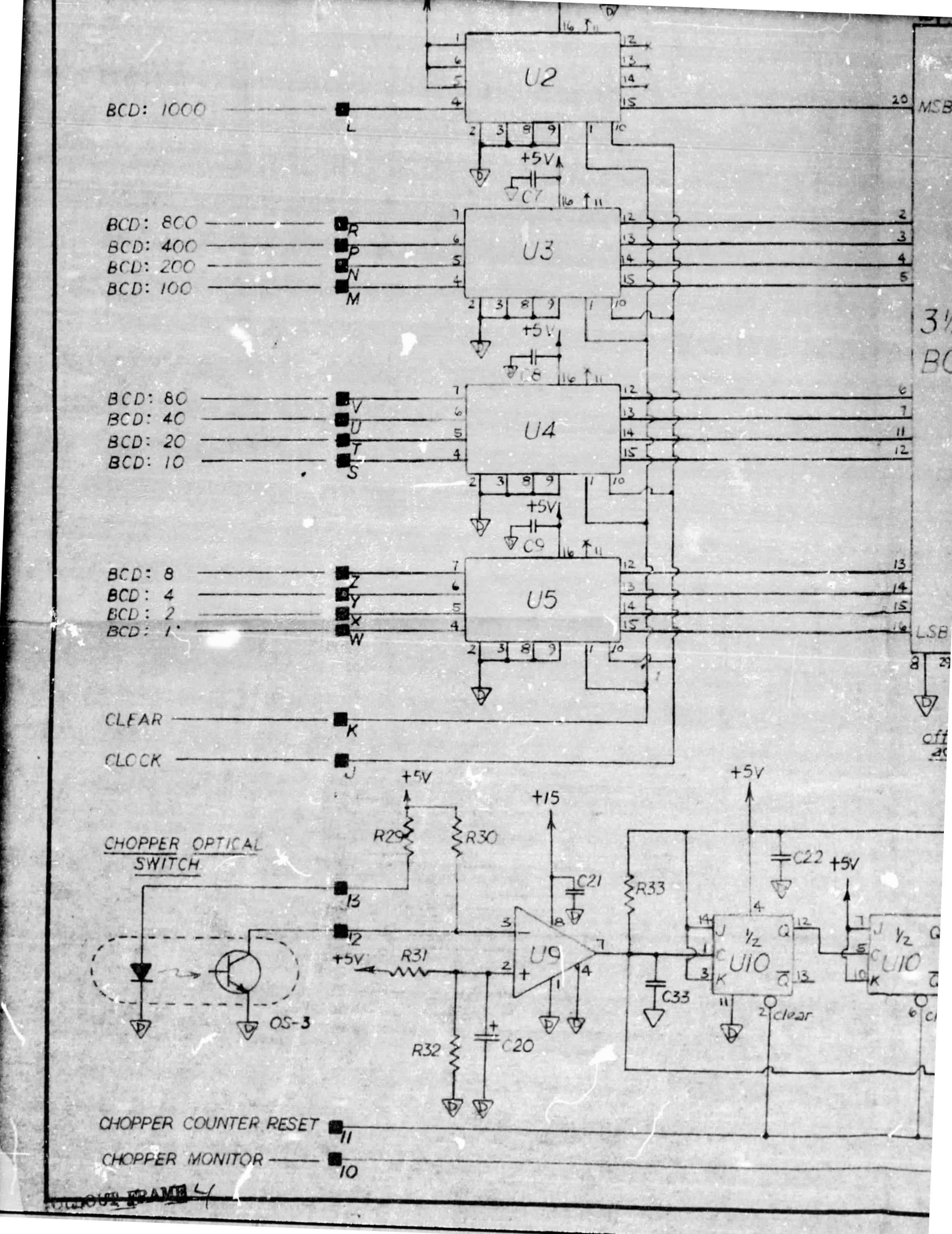
U2
U3
U4
U5
BCD: 1000
BCD: 800
BCD: 400
BCD: 200
BCD: 100
BCD: 80
BCD: 40
BCD: 20
BCD: 10
BCD: 8
BCD: 4
BCD: 2
BCD: 1
+5V
C7
C8
C9
MSB
LSB
CLEAR
CLOCK
CHOPPER OPTICAL SWITCH
OS-3
R29
R30
R31
R32
R33
C20
C21
C22
C33
+15
U9
U10
clear
CHOPPER COUNTER RESET
CHOPPER MONITOR

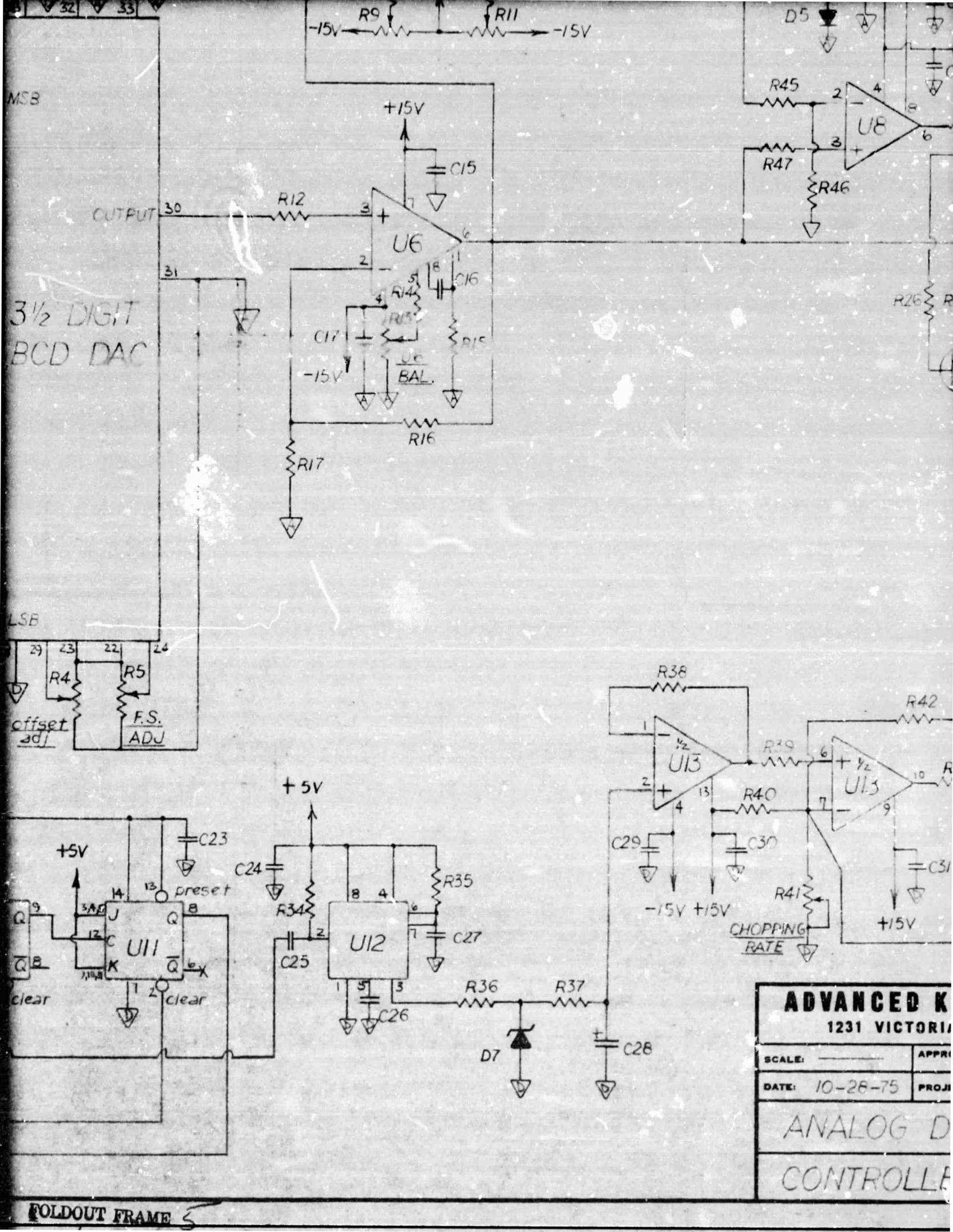
MSB
LSB
3½ DIGIT BCD DAC
OUTPUT
R9
R11
-15V
+15V
C15
R12
U6
C16
R14
R13
C17
R15
R16
R17
U6 BAL.
D5
R45
U8
R47
R46
R26
offset adj
R4
R5
F.S. ADJ
R38
U13
R42
R39
R40
C29
C30
C31
R41
CHOPPING RATE
+5V
C23
C24
R34
R35
U12
C25
C27
C26
R36
R37
D7
C28
U11
preset
clear
ADVANCED K
1231 VICTORI
SCALE:
DATE: 10-28-75
ANALOG D
CONTROLLE
FOLDOUT FRAME 5

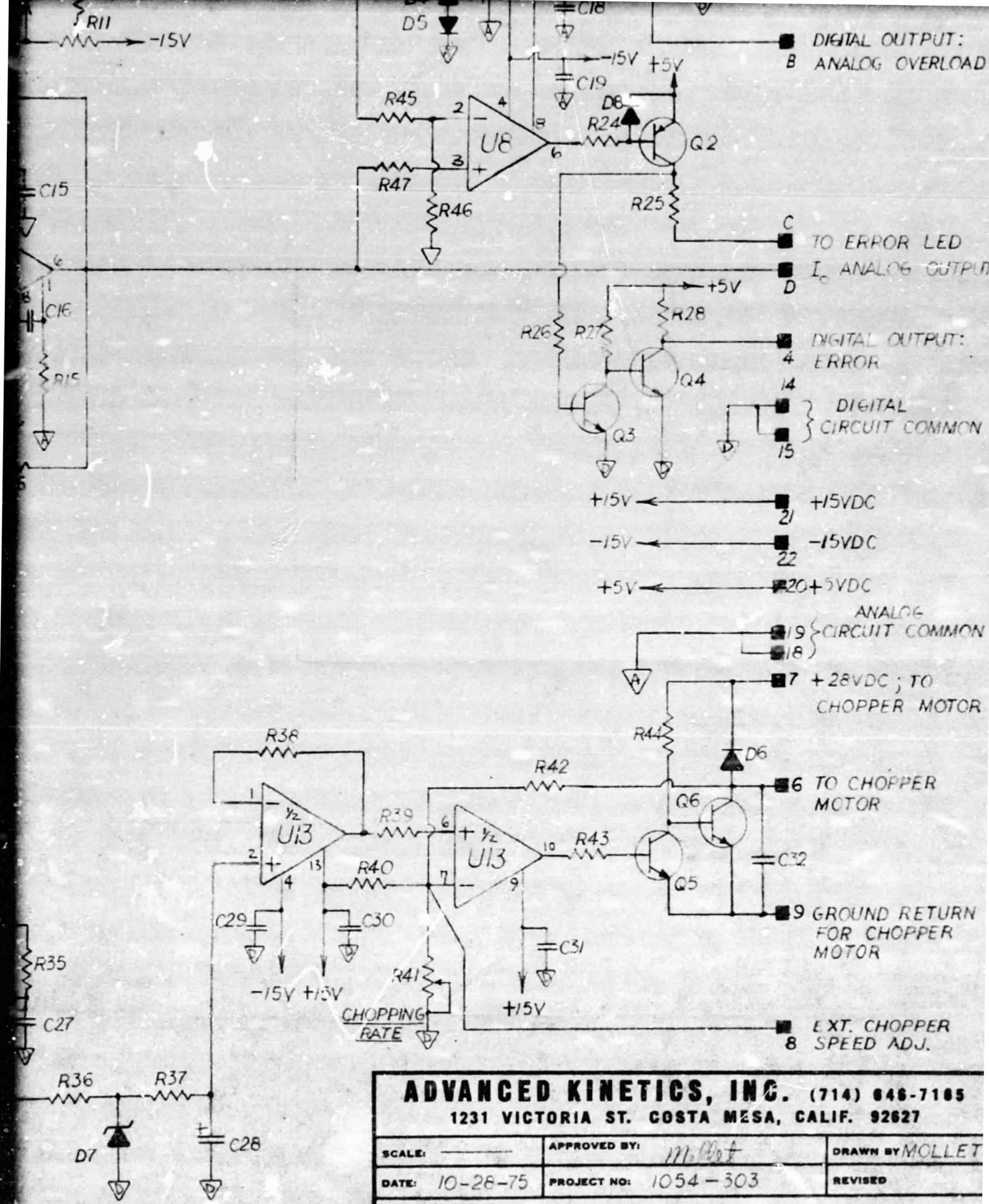

ADVANCED KINETICS, INC. (714) 646-7165 1231 VICTORIA ST. COSTA MESA, CALIF. 92627		
SCALE: ———	APPROVED BY: M. Mot	DRAWN BY MOLLET
DATE: 10-28-75	PROJECT NO: 1054-303	REVISED
ANALOG DIVIDER & CHOPPER CONTROLLER (OEM)		DRAWING NUMBER 5

FOLDOUT FRAME 6

FOLDOUT FRAME 1

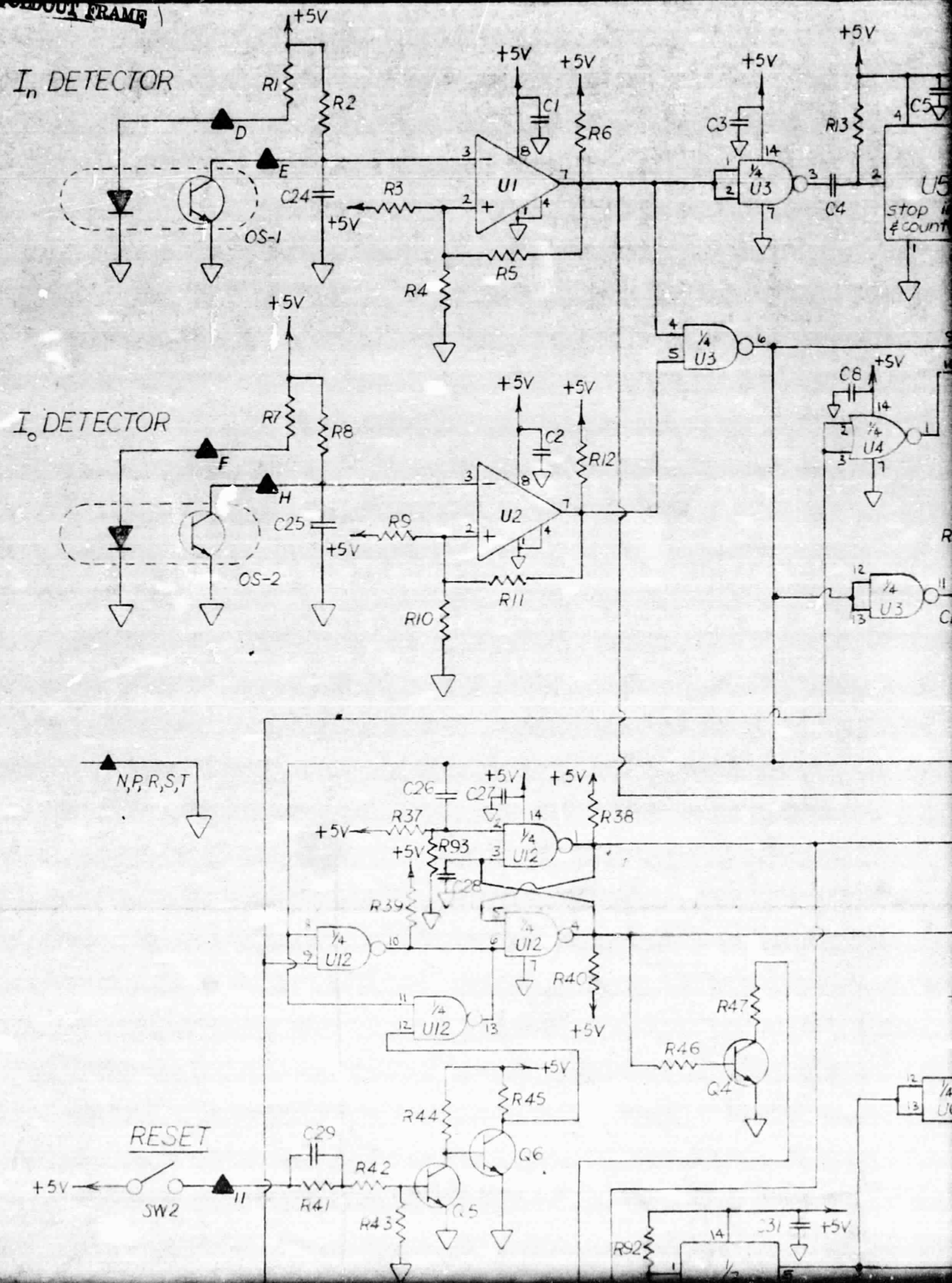

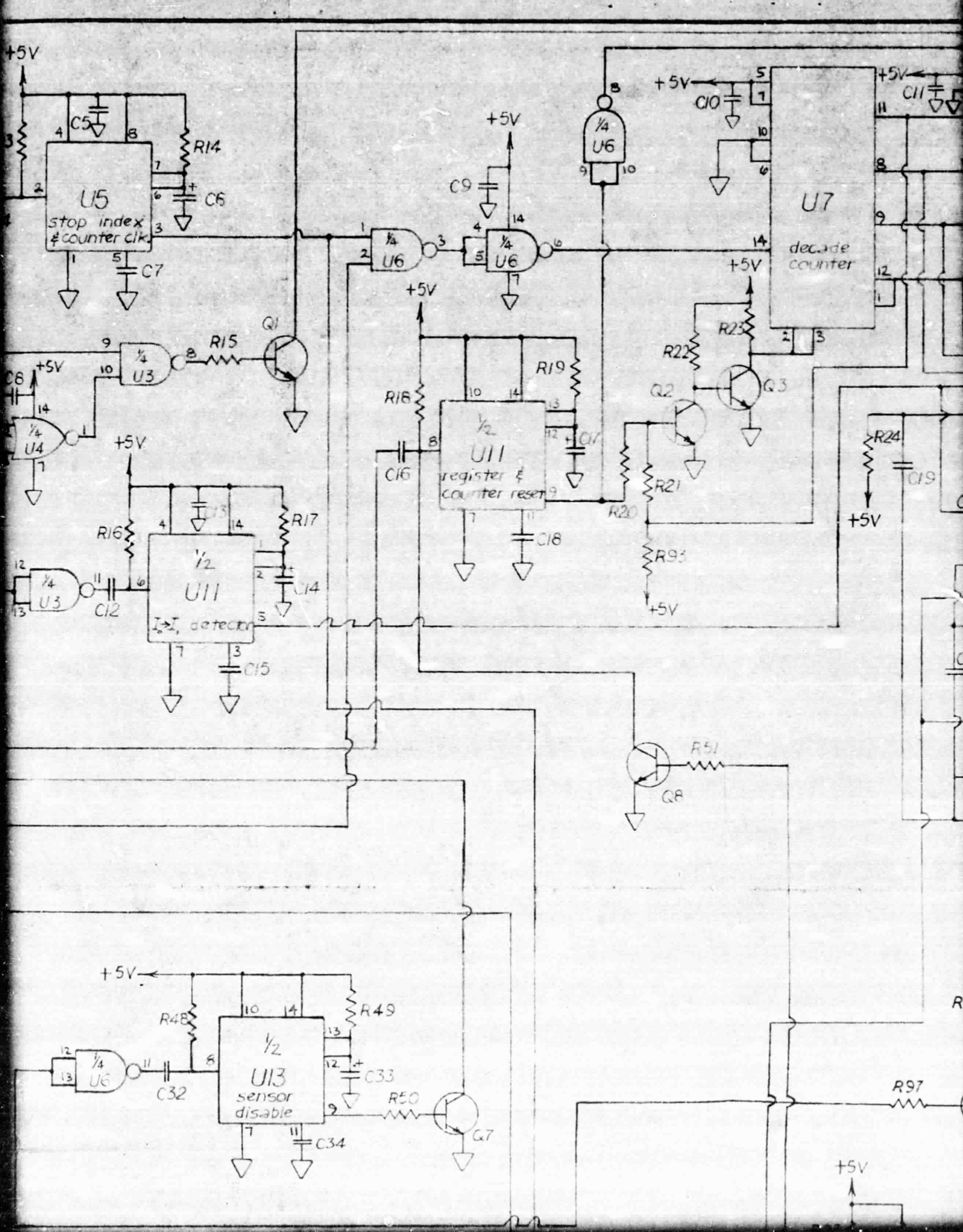

+5V
U5
stop index & counter clk
C5
R14
C6
C7
Q1
R15
1/4 U3
1/4 U4
C8
1/4 U6
C9
U7
decade counter
C10
C11
R22
R23
Q2
Q3
R18
R19
1/2 U11
register & counter reset
C16
C17
C18
R20
R21
R93
R24
C19
R16
R17
C13
C14
C12
C15
1/2 U11
I₀→I₁ detector
R51
Q8
R48
R49
1/2 U13
sensor disable
C32
C33
C34
R50
Q7
R97

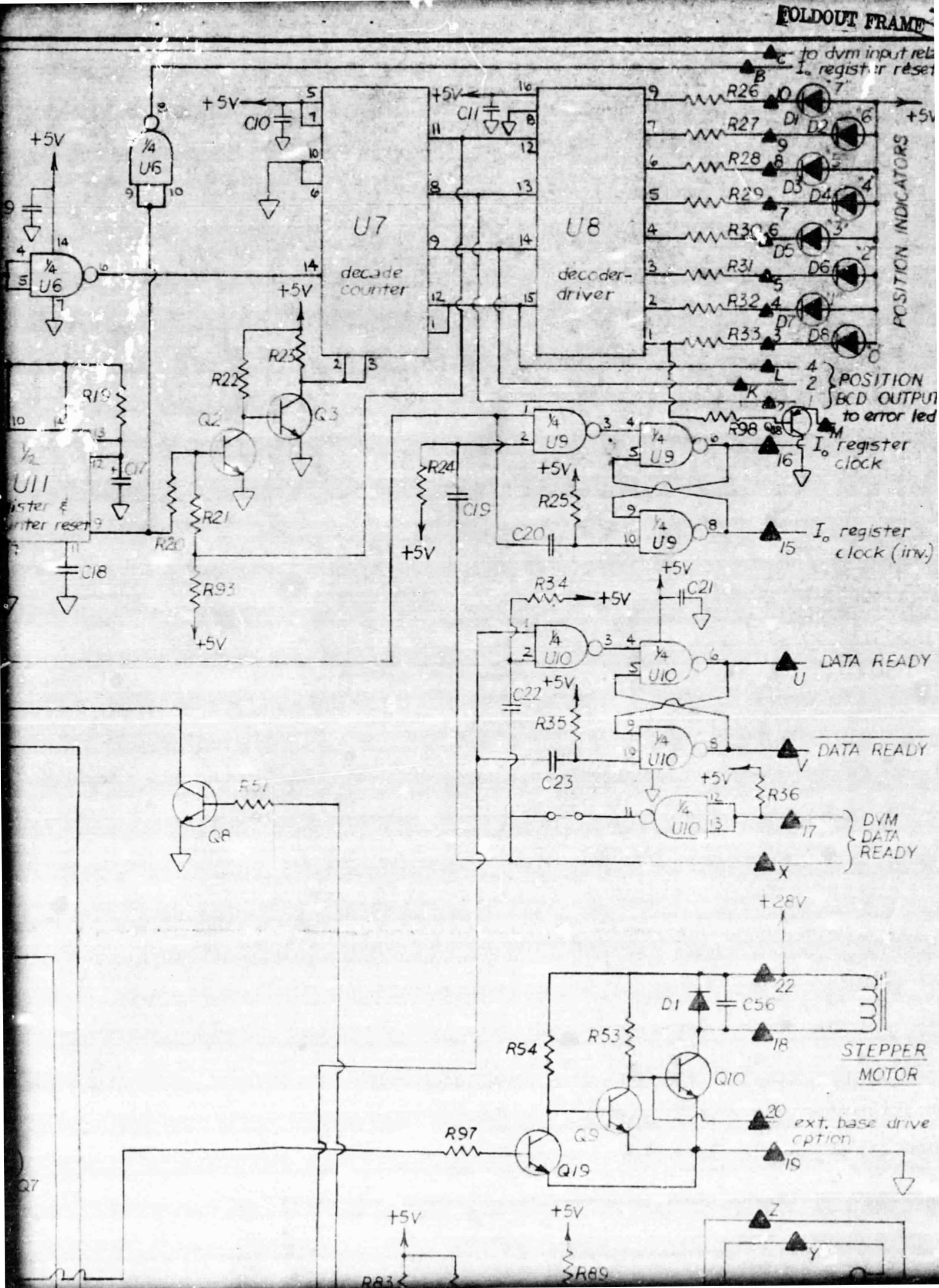
to dvm input rel
I₀ register reset
U7
decade counter
U8
decoder-driver
POSITION INDICATORS
POSITION BCD OUTPUT to error led
I₀ register clock
I₀ register clock (inv.)
DATA READY
DATA READY
DVM DATA READY
+28V
STEPPER MOTOR
ext. base drive option
U11
R19
R20
R21
R22
R23
R24
R25
R26
R27
R28
R29
R30
R31
R32
R33
R34
R35
R36
R53
R54
R57
R93
R97
R98
R83
R89
C10
C11
C17
C18
C19
C20
C21
C22
C23
C56
Q2
Q3
Q7
Q8
Q9
Q10
Q19
D1
D2
D3
D4
D5
D6
D7
D8
+5V

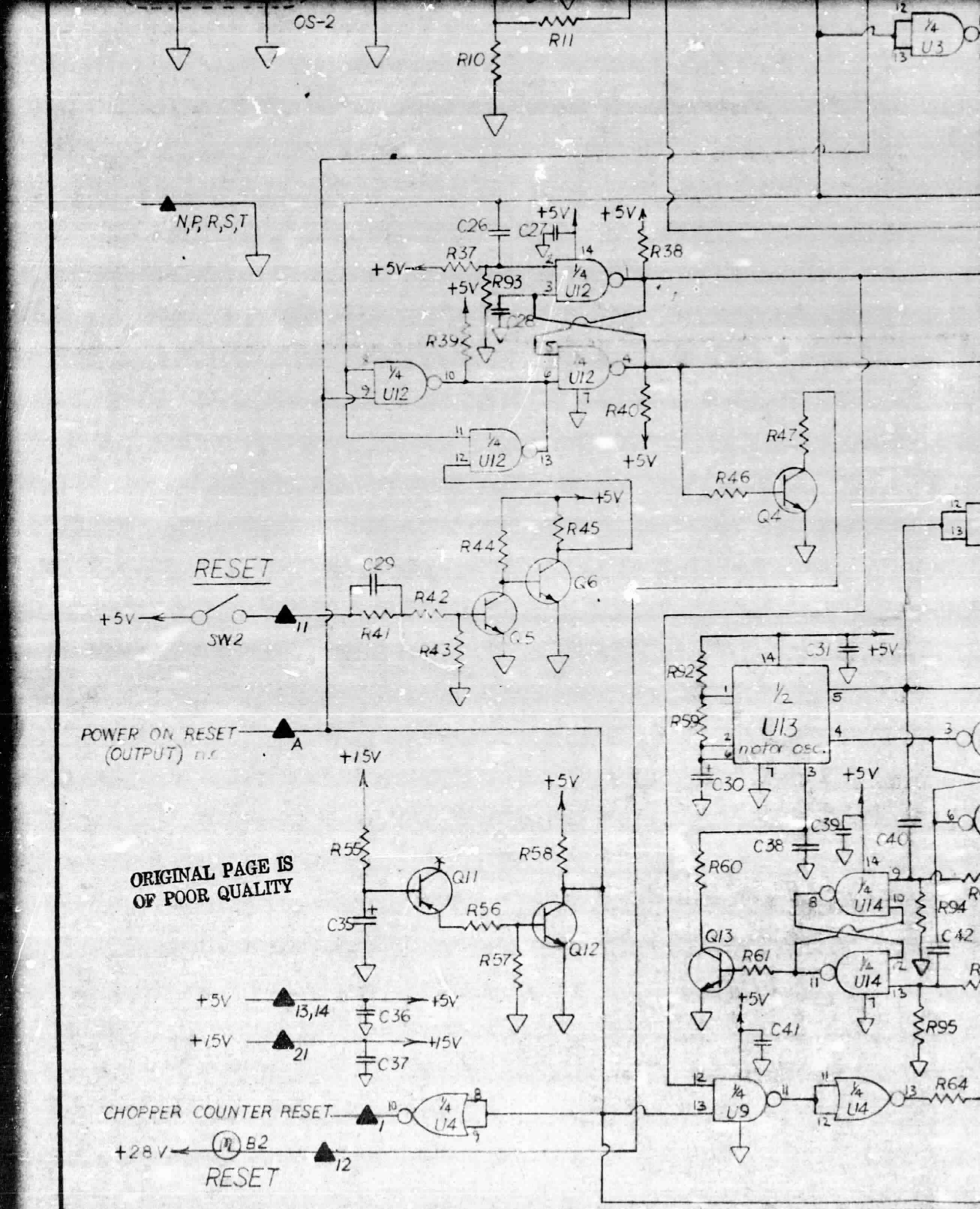

ORIGINAL PAGE IS
OF POOR QUALITY

FOLDOUT FRAME 4

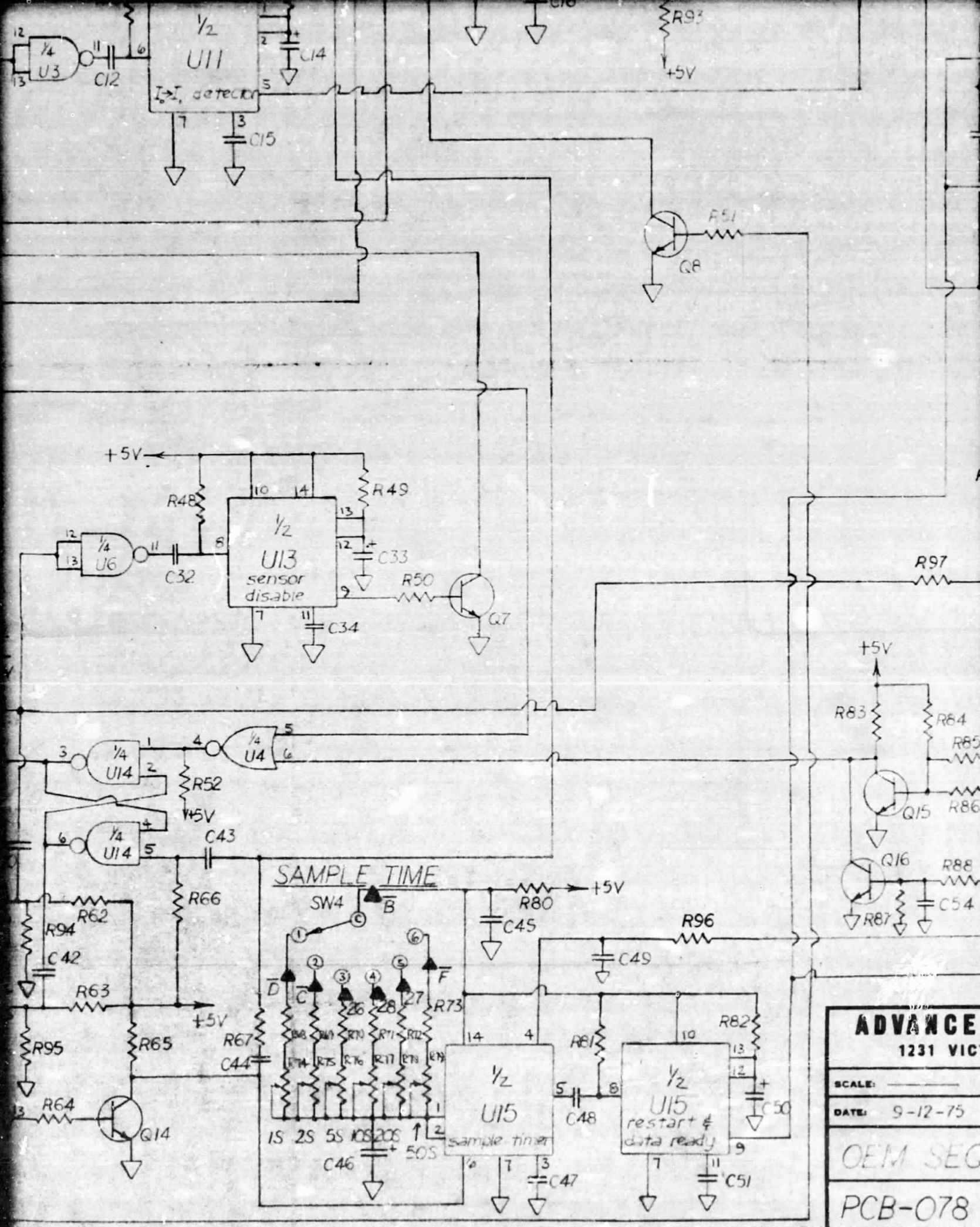

FOLDOUT FRAME 5

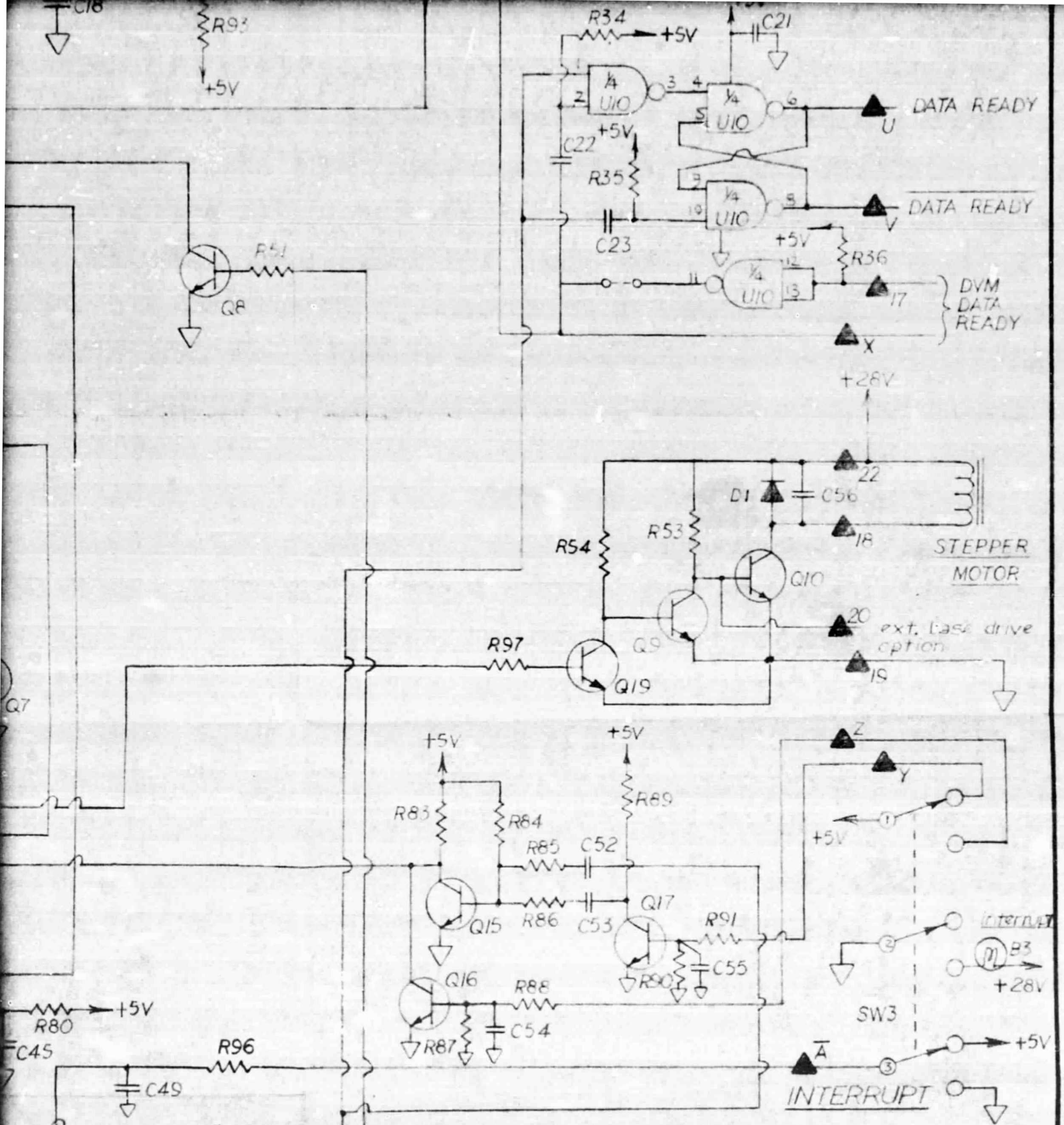

ADVANCED KINETICS, INC. (714) 646-7165 1231 VICTORIA ST. COSTA MESA, CALIF. 92627		
SCALE: ———	APPROVED BY:	DRAWN BY MOLLET
DATE: 9-12-75	PROJECT NO: 1054-303	REVISED
OEM SEQUENCER & CONTROLLER		
PCB-078 (OEM-1)		DRAWING NUMBER 6

FOLDOUT FRAME 6